TWIN DISC
INCORPORATED

Service Manual

Arneson Surface Drive™

Model:
ASD-16

Document Number: 1020915

NOTICE

Twin Disc, Incorporated makes no warranty or guaranty of any kind, expressed, implied or otherwise, with regard to the information contained within this manual. Twin Disc, Incorporated has developed this manual through research and testing of the information contained therein. Twin Disc, Incorporated assumes no responsibility for any errors that may appear in this manual and shall not be liable under any circumstances for incidental, consequential or punitive damages in connection with, or arising out of, the use of this manual. The information contained within this manual is subject to change without notice.

Document Number
1020915

Revision 2
August, 2010

Arneson Surface Drive ™
Service Manual

TWIN DISC, INCORPORATED
EXCLUSIVE LIMITED WARRANTY-
COMMERCIAL MARINE TRANSMISSION,
SURFACE DRIVE, and ELECTRONIC CONTROL SYSTEMS

A. Twin Disc, Incorporated warrants all assembled products and parts, (except component products or parts on which written warranties issued by the respective manufacturers thereof are furnished to the original customer, as to which Twin Disc, Incorporated makes no warranty and assumes no liability) against defective materials or workmanship *for a period of twenty-four (24) months from the date of shipment by Twin Disc, Incorporated to original customer, but not to exceed twelve (12) months of service, whichever occurs first.* **This is the only warranty made by Twin Disc, Incorporated and is in lieu of any and all other warranties, express or implied, including the warranties of merchantability or fitness for a particular purpose and no other warranties are implied or intended to be given by Twin Disc, Incorporated.**
The original customer does not rely upon any tests or inspections by Twin Disc, Incorporated or on Twin Disc, Incorporated's application engineering. Twin Disc, Incorporated is not responsible for any specific application, installation or performance standard. Any analysis program by Twin Disc, Incorporated based upon customer supplied information is done solely as an accommodation to the customer and is not to be interpreted or construed as an approval for specific application or installation or a guarantee of performance.

B. **The exclusive remedy provided by Twin Disc, Incorporated whether arising out of warranty within the applicable warranty period as specified, or otherwise (including tort liability), shall at the sole option of Twin Disc, Incorporated be either the repair or replacement of any Twin Disc, Incorporated part or product found by Twin Disc, Incorporated to be defective and the labor to perform that work and to remove and reinstall (or equivalent credit). In this context, labor is defined as the flat rate labor hours established by Twin Disc, Incorporated in the published Twin Disc Flat Rate Schedule, required to remove, disassemble, inspect, repair, reassemble, reinstall and test the Twin Disc, Incorporated product only. Authorized reasonable travel and living expenses will be considered for payment on all Commercial Marine Products except on Electronic Control Systems. . Under no circumstances, including a failure of the exclusive remedy, shall Twin Disc, Incorporated be liable for economic loss, consequential, incidental or punitive damages.**

The above warranty and remedy are subject to the following terms and conditions:

1. Complete parts or products upon request must be returned transportation prepaid and also the claims submitted to Twin Disc, Incorporated within sixty (60) days after completion of the in warranty repair.
2. The warranty is void if, in the opinion of Twin Disc, Incorporated, the failure of the part or product resulted from abuse, neglect, improper maintenance or accident.
3. The warranty is void if any modifications are made to any product or part without the prior written consent of Twin Disc, Incorporated.
4. The warranty is void unless the product or part is properly transported, stored and cared for from the date of shipment to the date placed in service.
5. The warranty is void unless the product or part is properly installed and maintained within the rated capacity of the product or part with installations properly engineered and in accordance with the practices, methods and instructions approved or provided by Twin Disc, Incorporated.
6. The warranty is void unless all required replacement parts or products are of Twin Disc origin or equal, and otherwise identical with components of the original equipment. Replacement parts or products not of Twin Disc origin are not warranted by Twin Disc, Incorporated.

C. As consideration for this warranty, the original customer and subsequent purchaser agree to indemnify and hold Twin Disc, Incorporated harmless from and against all and any loss, liability, damages or expenses for injury to persons or property, including without limitation, the original customer's and subsequent purchaser's employees and property, due to their acts or omissions or the acts or omissions of their agents, and employees in the installation, transportation, maintenance, use and operation of said equipment.

D. Only a Twin Disc, Incorporated authorized factory representative shall have authority to assume any cost or expense in the service, repair or replacement of any part or product within the warranty period, except when such cost or expense is authorized in advance in writing by Twin Disc, Incorporated.

E. Twin Disc, Incorporated reserves the right to improve the product through changes in design or materials without being obligated to incorporate such changes in products of prior manufacture. The original customer and subsequent purchasers will not use any such changes as evidence of insufficiency or inadequacy of prior designs or materials.

F. If failure occurs within the warranty period, and constitutes a breach of warranty, repair or replacement parts will be furnished on a no charge basis and these parts will be covered by the remainder of the unexpired warranty which remains in effect on the complete unit.

FLAT RATE SCHEDULE FOR
COMMERCIAL MARINE *TRANSMISSION*

(Hourly Labor Rate Must be Acceptable to Twin Disc, Incorporated.)

Product Code / Model Series	R&R	Unit Rebuild	Clutch Repair (both packs)	R&R Pump	R&R Valve	Rebuild Valve
0432 - MG5010 & MG5011 SERIES	10.0	8.0	2.0	1.0	1.0	0.5
0401 - MG506 SERIES	10.0	11.0	4.0	1.0	1.0	0.5
0435 - MG5050 SERIES	10.0	11.0	4.0	1.0	1.0	0.5
0437 - MG5061 & MG5062V SERIES	10.0	11.0	4.0	1.0	1.0	0.5
0453 - MG5055A SERIES	10.0	11.0	4.0	1.0	1.0	0.5
1706 - MG5065A SERIES	10.0	11.0	4.0	1.0	1.0	0.5
1707 - MG5065SC SERIES	10.0	11.0	4.0	1.0	1.0	0.5
0425 - MG5085 SERIES	10.0	12.0	4.0	1.0	1.0	0.5
0442 - MG5075A SERIES	10.0	12.0	4.0	1.0	1.0	0.5
0443 - MG5075SC SERIES	10.0	12.0	4.0	1.0	1.0	0.5
0476 - MG5082 SERIES	10.0	12.0	4.0	1.0	1.0	0.5
0419 - MG5114 SERIES	10.0	17.0	5.0	1.0	1.0	0.5
0433 - MG5090 SERIES	10.0	17.0	5.0	1.0	1.0	0.5
0489 - MGX5114A SERIES	10.0	17.0	5.0	1.0	1.0	0.5
0490 - MGX5114SC SERIES	10.0	17.0	5.0	1.0	1.0	0.5
0491 - MGX5114IV SERIES	10.0	17.0	5.0	1.0	1.0	0.5
1719 - MGX5095A SERIES	10.0	17.0	5.0	1.0	1.0	0.5
1728 - MG5095A SERIES	10.0	17.0	5.0	1.0	1.0	0.5
1729 - MG5095SC SERIES	10.0	17.0	5.0	1.0	1.0	0.5
0405 - MG514 SERIES	10.0	25.0	6.0	1.0	1.0	0.5
0447 - MG5145A SERIES	10.0	25.0	6.0	1.0	1.0	0.5
0448 - MG5145SC SERIES	10.0	25.0	6.0	1.0	1.0	0.5
0492 - MGX5135A SERIES	10.0	25.0	6.0	1.0	1.0	0.5
0494 - MGX5145SC SERIES	10.0	25.0	6.0	1.0	1.0	0.5
0426 - MG516 & MG5170 SERIES	10.0	28.0	8.0	1.0	1.0	0.5
0477 - MG5170 SERIES	10.0	28.0	8.0	1.0	1.0	0.5
0412 - MG5200 SERIES	10.0	32.0	10.0	1.0	1.0	0.5
0416 - MG518 SERIES	10.0	32.0	10.0	1.0	1.0	0.5
0459 - MG6557SC SERIES	10.0	32.0	10.0	1.0	1.0	0.5
0461 - MG6557RV SERIES	10.0	32.0	10.0	1.0	1.0	0.5
0473 - MG-520-1HP SERIES	10.0	32.0	10.0	1.0	1.0	0.5
0479 - MG-5222DC SERIES	10.0	32.0	10.0	1.0	1.0	0.5
0480 - MG-5225DC SERIES	10.0	32.0	10.0	1.0	1.0	0.5
1743 - MGX-5225DC SERIES	10.0	32.0	10.0	1.0	1.0	0.5
0441 - MG-6650-00-SC SERIES	12.0	32.0	16.0	1.0	1.0	0.5
0446 - MG-6848-00-SC SERIES	12.0	32.0	16.0	1.0	1.0	0.5
0478 - MG-6690SC SERIES	12.0	32.0	16.0	1.0	1.0	0.5
0484 - MGX-61500SC SERIES	12.0	32.0	16.0	1.0	1.0	0.5
0485 - MGX-6650 SERIES	12.0	32.0	16.0	1.0	1.0	0.5
0487 - MGX-6690SC SERIES	12.0	32.0	16.0	1.0	1.0	0.5
0488 - MGX-6848SC SERIES	12.0	32.0	16.0	1.0	1.0	0.5
1711 - MG-5321 SERIES	12.0	32.0	16.0	1.0	1.0	0.5
1721 - MGX-6620SC SERIES	12.0	32.0	16.0	1.0	1.0	0.5
1732 - MGX-5321DC SERIES	12.0	32.0	16.0	1.0	1.0	0.5
1737 - MGX-6599A SERIES	12.0	32.0	16.0	1.0	1.0	0.5
0408 - MG540 SERIES	20.0	62.0	20.0	1.0	1.0	0.5
0418 - MG5600 SERIES	20.0	62.0	20.0	1.0	1.0	0.5
1741 - MGX-5600 SERIES	20.0	62.0	20.0	1.0	1.0	0.5

FLAT RATE HOUR ALLOWANCE
COMMERCIAL MARINE *SURFACE DRIVE*

(Hourly Labor Rate Must be Acceptable to Twin Disc, Incorporated.)

Description of Flat Rate Labor	ASD6	ASD8	ASD 10	ASD 11	ASD1 2	ASD 14	ASD 15	ASD 16
Removal and Reinstallation	2	3	3	3	4	6	8	8
Recondition complete unit and test for leaks	5	6	6	6	6	6	8	8
Replace front oil seal	1	1	1	1	1	1	1	1
Replace input shaft	1	3	3	3	3	4	4	4
Replace input gear/sprocket	1	3	3	3	-	-	-	-
Replace Chain	1	4	4	4	-	-	-	-
Replace H-Joint	2	2	2	2	3	3	3	3
Replace thrust ball	2	2	2	2	3	3	3	3
Replace retainer ring	2	2	2	2	2	2	2	2
Replace propeller shaft	2	3	3	3	3	4	4	4
Replace thrust tube	2	3	3	3	4	5	6	6
Replace rear oil seal	1	1	1	1	1	1	1	1
Replace steer cylinder	1	1	1	1	1	1	1	1
Replace power steer pump	1	1	1	1	1	1	1	1
Replace trim pump	1	1	1	1	1	1	1	1
Replace Ball Boot	2	2	2	2	2	2	2	2
Replace and align driveline	1	2	2	2	2	3	3	3

FLAT RATE HOUR ALLOWANCE
COMMERCIAL MARINE *ELECTRONIC CONTROL SYSTEMS*

(Hourly Labor Rate Must be Acceptable to Twin Disc, Incorporated.)

*** Travel and related expenses are not included as a part of Twin Disc Electronic Control Warranty.**

Description of Flat Rate Labor (hours allowed for function to the right =>)	EC075	EC200	EC250	EC300	External Sensor
Removal and Reinstallation and Test	3	3	3	3	1
Electronic Control Repair * * there are no serviceable internal components	0	0	0	0	0

Table of Contents

Introduction

General Information

This publication provides service information for the Twin Disc model ASD16 Arneson Surface Drive. Specific engineering details and performance characteristics can be obtained from the Product Service Department of Twin Disc, Incorporated, Racine, Wisconsin, USA..

Operation and maintenance personnel responsible for this equipment should be familiar with this publication and have it at their disposal. A thorough understanding and application of the material in this manual will result in consistent performance from the unit and help reduce downtime.

Safety and General Precautions

General

All personnel servicing this equipment should employ safe operating practices. Twin Disc, Inc. will not be responsible for personal injury resulting from careless use of hand tools, lifting equipment, power tools, or unaccepted maintenance/working practices.

Important Safety Notice

Proper installation, maintenance, and operation procedures must be followed due to the possible danger to person(s) or property from accidents that may result from the use of machinery. Twin Disc, Inc. will not be responsible for personal injury resulting from careless maintenance/working practices.

Inspect as necessary to assure safe operations under prevailing conditions. Proper guards and other safety devices that may be specified in safety codes should be provided. These devices are neither provided by, nor are they the responsibility of Twin Disc, Inc.

⚠ WARNING To prevent accidental starting of the engine when performing routine Arneson Surface Drive maintenance, disconnect the battery cables from the battery and remove ignition key from the switch.

⚠ WARNING Most Twin Disc products have provisions for attaching lifting bolts. The holes provided are always of adequate size and number to safely lift the Twin Disc product. These lifting points must not be used to lift the complete power unit. Lifting excessive loads at these points could cause failure at the lift point (or points) and result in damage or personal injury.

⚠ CAUTION

Select lifting eyebolts to obtain maximum thread engagement with bolt shoulder tight against housing. Bolts should be near but should not contact bottom of bolt hole.

Preventative Maintenance

Frequent reference to the information provided in this manual regarding daily operation and limitations of this equipment will assist in obtaining trouble-free operation. Schedules are provided for recommended maintenance of the equipment and, if observed, minimum repairs (aside from normal wear) will result.

Ordering Parts and Obtaining Services

WARNING

All replacement parts or products (including hoses and fittings) must be of Twin Disc origin or equal, and otherwise identical with components of the original equipment. Use of any other parts or products will void the warranty and may result in malfunction or accident, causing injury to personnel and/or serious damage to the equipment.

Ordering Service Parts

Renewal parts, service parts kits, optional equipment and product service assistance may be obtained from any authorized Twin Disc distributor or service dealer. Contact Twin Disc for the distributor or service dealer near you.

Note: Do not order parts from the part numbers on the cross-sectional drawings. These numbers may be referenced for part identification; however, they should be verified on the bill of material (BOM) before an order is placed. BOM numbers are stamped on the unit nameplate.

Twin Disc, having stipulated the bill of material number on the unit's nameplate, absolves itself of any responsibility resulting from any external, internal, or installation changes made in the field without the express written approval of Twin Disc. All returned parts, new or old, emanating from any of the above stated changes will not be accepted for credit. Furthermore, any equipment that has been subjected to such changes will not be covered by a Twin Disc warranty.

Source of Service Information

For the latest service information on Twin Disc products, contact any Twin Disc distributor or service dealer. This can be done on the Twin Disc corporate web site found at [http://www.twindisc.com]. Provide your model number, serial number and bill of material number to obtain information on your unit. If necessary, contact the Product Service Department, Twin Disc, Incorporated, Racine, Wisconsin 53405-3698, USA by e-mail at service@twindisc.com.

Rebuilding service

Twin Disc may provide a complete rebuilding service for Arneson Surface Drive units and hydraulic cylinders. Call or write Twin Disc, Incorporated for information on services, pricing and scheduling.

Twin Disc Incorporated
1328 Racine St.
Racine, Wisconsin 53403 USA

Telephone: (262) 638-4000
Fax: (262) 638-4480

Warranty

Equipment for which this manual was written has a limited warranty. For details of the warranty, refer to the warranty statement at the front of this manual. For details of the warranty, contact any Twin Disc Authorized Distributor, service dealer, or the Warranty Administration Department, Twin Disc, Inc., Racine, Wisconsin, U.S.A.

Description and Specifications

General

The Arneson Surface Drive model ASD16 is an in line steerable propulsion system that supports and drives a surface piercing propeller at variable depth positions.

Models included in this manual are listed below.

- ☐ 1007027 Original, lip seals
- ☐ 1007027A Commercial, mechanical face seal
- ☐ 1018683 Commercial, mechanical face seal
- ☐ 1018347 Inconel shaft, mechanical face seal
- ☐ 1021244 Commercial, lip seals
- ☐ 1020763 Military, SAE key-type u-joint splines
- ☐ 1021360 Military, 90 mm involute u-joint splines
- ☐ 1021360A Same as 1021360 but with heavy duty boot
- ☐ 1022953 Commercial applications, with lip seals

Nameplate

The nameplate identifies the model, bill of material (BOM) , and the serial number of the unit. These numbers are necessary to identify the correct parts for the surface drive.

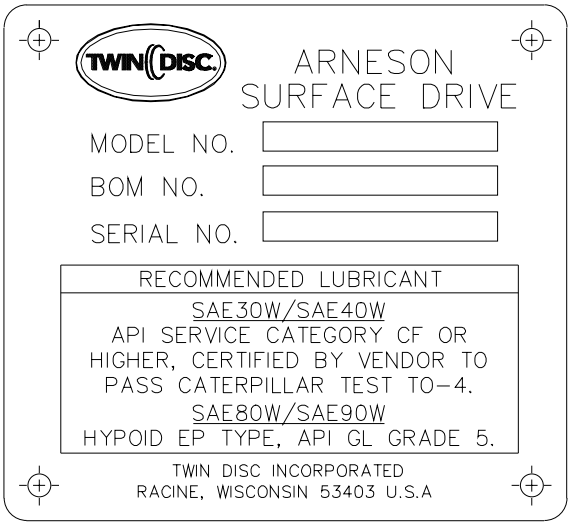

Figure 1. Nameplate for Arneson Surface Drive

Construction Features and Specifications

Maximum operating speed is 2500 RPM

Arrangement

The ASD16 is arranged as two major subassemblies; the thrust socket assembly and the thrust tube assembly. The thrust socket assembly is fixed to the vessel's transom, and the thrust tube pivots on the socket.

Housings

The ASD16 is comprised of three housings; the thrust tube, thrust ball and the thrust socket. Both are of aluminum alloy material.

Bearings

The input (engine driven) shaft is supported and located by two tapered roller bearings. The bearing clearance for the input shaft is set by use of a single shim pack between the rear bearing sleeve and the socket housing. The propeller shaft is supported by two tapered roller bearings on the input end, and by a spherical roller bearing on the output end. The bearing clearance on the two tapered roller bearings is controlled by the use of a single shim pack between the thrust ball and the forward bearing cone.

Shafts

Both of the shafts are heat treated stainless steel material.

U-joint Assembly

The U-joint assembly is a constant velocity universal joint assembly that is spline connected to the input shaft and the propeller shaft. It is located and retained to the input shaft to prevent axial float. The output spline is sized to slip freely on the propeller shaft, allowing relative axial movement at the universal joint output end only.

Weight

The approximate dry weight of the ASD16 is 900 kg (1985 lbs.) This includes the Arneson Surface Drive unit, the trim and steering cylinders, the trim pump, reservoir, mounting hardware and hoses.

Drive Lubrication Features

The lubrication system consists of an oil reservoir that is located in the vessel, a valve to allow removal and filling of the drive with an external pump, and hoses, clamps, and push lock couplings. The reservoir is mounted a minimum of 25.4 cm (10 in.) above the ASD16 centerline, and the internal drive cavity completely filled with appropriate oil. The reservoir is filled to one third full to allow for expansion and agitation of the oil during operation.

Arneson Surface Drive Oil Capacity

The approximate capacity of the Arneson Surface Drive and reservoir is 76 to 92 liters (20 to 25 gallons).

Arneson Surface Drive Oil Specifications

The Arneson Surface Drive oil is specified as API Service category CF or higher, certified to meet Caterpillar Test TO-4, SAE 30 (100 cst @ 100 degrees F) or SAE 40 (141 cst @ 100 degrees F).

Steering and Trim Hydraulic Specifications

Hydraulic fluid such as Dexron III automatic transmission fluid should be used for the power steering and power trim hydraulic systems.

Torque Values for Fasteners

Table 1. Torque specifications for fasteners used in ASD16

Torque values for assemblies: 1007027; 1007027A; 1018347; 1018684

DESCRIPTION	DRY TORQUE VALUE	
	Metric	**SAE**
Seal Carrier Screw	2700 N-mm	24 in-lbs
Fin Screw*	44 N-m	32 ft-lbs
Thrust Ball Screw	170 N-m	125 ft-lbs
Ball Retainer Screw	60 N-m	45 ft-lbs
Propeller Nut	1220-1360 N-m	900-1000 ft-lbs
Propeller Jan Nut**	678 N-m**	500 ft-lbs**
U-Joint Yoke Screw	120 N-m	90 ft-lbs
Bearing Sleeve Screw	55 N-m	40 ft-lbs
Companion Flange Screw	55 N-m	40 ft-lbs
Bearing Sleeve Set Screw	70 N-m	50 ft-lbs
Fill and Drain Plugs	50 N-m	35 ft-lbs
Mechanical Sleeve Collar	14 N-m	10 ft-lbs
Rubber Boot Clamps	4520 N-mm	40 in-lbs

* Apply Loctite® Thread Locking Compound No. 242 (blue semi-permanent).

** Torque to 678 N-m (500 ft-lbs), then, if necessary, continue until the cotter pin slot in nut aligns with hole in shaft.

Torque values for assemblies: 1020763

DESCRIPTION	DRY TORQUE VALUE	
	Metric	**SAE**
Seal Carrier Screw	2700 N-mm	24 in-lbs
Fin Screw*	44 N-m	32 ft-lbs
Thrust Ball Screw	170 N-m	125 ft-lbs
Ball Retainer Screw	60 N-m	45 ft-lbs
Propeller Nut	1220-1360 N-m	900-1000 ft-lbs
Propeller Jan Nut**	1000-1150 N-m**	700-800 ft-lbs**
U-Joint Yoke Screw	120 N-m	90 ft-lbs
Bearing Sleeve Screw	55 N-m	40 ft-lbs
Companion Flange Screw	55 N-m	40 ft-lbs
Bearing Sleeve Set Screw	70 N-m	50 ft-lbs
Fill and Drain Plugs	50 N-m	35 ft-lbs
Thrust Bearing Sleeve	14 N-m	10 ft-lbs
Rope Guard Screws	9 N-m	7 ft-lbs
Mechanical Sleeve Collar	14 N-m	10 ft-lbs
Rubber Boot Clamps	4520 N-mm	40 in-lbs

* Apply Loctite® Thread Locking Compound No. 242 (blue semi-permanent).

** Approach lower torque value, then continue until the cotter pin slot in nut aligns with hole in shaft. Do not exceed the maximum torque value.

Torque values for assemblies: 1021360; 1021360A

DESCRIPTION	DRY TORQUE VALUE	
	Metric	**SAE**
Seal Carrier Screw	2700 N-mm	24 in-lbs
Fin Screw*	44 N-m	32 ft-lbs
Thrust Ball Screw	170 N-m	125 ft-lbs
Ball Retainer Screw	60 N-m	45 ft-lbs
Propeller Nut	1220-1360 N-m	900-1000 ft-lbs
Propeller Jan Nut**	1000-1150 N-m**	700-800 ft-lbs**
U-Joint Yoke Screw	120 N-m	90 ft-lbs
Bearing Sleeve Screw	55 N-m	40 ft-lbs
Companion Flange Screw	55 N-m	40 ft-lbs
Bearing Sleeve Set Screw	70 N-m	50 ft-lbs
Fill and Drain Plugs	50 N-m	35 ft-lbs
Thrust Bearing Sleeve	14 N-m	10 ft-lbs
Rope Guard Screws	9 N-m	7 ft-lbs
Mechanical Sleeve Collar	14 N-m	10 ft-lbs
Rubber Boot Clamps	4520 N-mm	40 in-lbs

* Apply Loctite® Thread Locking Compound No. 242 (blue semi-permanent).

** Approach lower torque value, then continue until the cotter pin slot in nut aligns with hole in shaft. Do not exceed the maximum torque value.

Torque values for assemblies: 1022953

DESCRIPTION	DRY TORQUE VALUE	
	Metric	**SAE**
Seal Carrier Screw	2700 N-mm	24 in-lbs
Fin Screw*	44 N-m	32 ft-lbs
Thrust Ball Screw	170 N-m	125 ft-lbs
Thrust Ball Retainer Screw	60 N-m	45 ft-lbs
Propeller Nut	1220-1360 N-m	900-1000 ft-lbs
Propeller Jan Nut**	1000-1150 N-m**	700-800 ft-lbs**
U-Joint Yoke Screw	120 N-m	90 ft-lbs
Bearing Sleeve Screw	55 N-m	40 ft-lbs
Companion Flange Screw	55 N-m	40 ft-lbs
Bearing Sleeve Set Screw	70 N-m	50 ft-lbs
Fill and Drain Plugs	50 N-m	35 ft-lbs
Thrust Bearing Sleeve	14 N-m	10 ft-lbs
Rubber Boot Clamps	4520 N-mm	40 in-lbs

* Apply Loctite® Thread Locking Compound No. 242 (blue semi-permanent).

** Approach lower torque value, then continue until the cotter pin slot in nut aligns with hole in shaft. Do not exceed the maximum torque value.

Installation

General

Note: For reinstallation of repaired units to the transom from which it was removed, see the instructions at the end of Assembly in this manual.

Note: Please read this Installation Manual all the way through, and become thoroughly familiar with its contents before commencing installation procedures.

Installation Requirements

The installation of the surface drive must comply with all prevailing manufacturer's instructions and requirements as defined in this manual.

Twin Disc, Incorporated will not be responsible for surface drives that have been improperly installed, or where such installations shall be deemed to be unsafe or structurally unsound. Such improper installation shall immediately void all Twin Disc, Incorporated warranties.

Rated Capacity

Model ASD16 Arneson Surface Drives are designed for a maximum intermittent torque loading of 22,400 N-m (16,500 ft-lbs) applied at the input shaft flange. Please verify that output of the power unit to be used does not exceed this torque rating. Consult Twin Disc, Incorporated for applications exceeding this capacity, or if the installation is intended for commercial or heavy duty use.

Reduction Ratio and Propeller

Gearbox reduction ratio and propeller pitch/diameter selection are based on hull design, normal operating weight and rated engine performance. Twin Disc, Incorporated is prepared to provide preliminary recommendations, but actual propeller requirements may change in service.

Packing List

Consult packing list and verify that all listed items have been received, and are undamaged.

Note: All internal components of the surface drive must be protected from the damaging effects of dirt, grit, and dust prior to installation. Take care to insure these components are kept clean by the use of plastic, or other clean covering. Care must be taken not to damage the surface of the thrust ball, trim and steering cylinder rods, or exposed portion of the propeller shaft. Nicks and scratches can cause premature seal failure and subsequent oil leaks.

Structural Strength of Mounting

The vessel structure in the area of the transom, and the transom itself, bears the entire weight of the surface drive and the torque and thrust loads generated by the propeller(s). A solid mounting base and a properly designed transom structure is essential for the successful installation of surface drives. If the transom and mounting base is not sufficiently strong, it is possible to damage the surface drive or the vessel itself. Twin Disc, Incorporated will not be responsible for surface drives that have been improperly mounted, or where mounting is deemed to be unsafe or structurally unsound. Such mounting will void all Twin Disc, Incorporated warranties.

Mounting Requirements

The Arneson Surface Drive propeller requires “clean” water flow to operate at a proper efficiency. The bottom of the vessel hull should be clean and clear of any obstructions such as water intakes, speedometer sensors, etc. for an area at least 21 cm (8 in) each side of the propeller tips, and at least 1.83 m (6 ft) forward of the transom.

The optimum mounting angle for Arneson Surface Drive is six degrees to the vessel’s baseline. Correct mounting of the unit may require a supplementary wedge. When ordering the Arneson Surface Drive, be sure to specify existing transom angle, deadrise angle of hull, and whether it’s a single or twin installation. Application inquiries can be correctly answered only if accompanied by an Application Data Sheet that is available from the dealer or the factory.

Inboard and outboard surfaces of the transom must be parallel to within 6.40 mm (1/4 in). Transom outboard surface must be flat to within 1.60 mm (1/16 in). Transom inboard surface must be flat to within 3.18 mm (1/8 in) in way of the surface drive socket.

⚠ CAUTION

If the surface drive is installed with an incorrect mounting angle, serious performance deficiencies could result.

Mounting Hardware

All mounting hardware used, other than that supplied by Twin Disc, Incorporated, must be of stainless steel, and must meet Twin Disc, Incorporated standards. Flat washers must be used under all nuts and bolt heads. Thread lubricant must be used with all mounting hardware, to prevent galling and/or seizing. All bolt holes through fiberglass material should be cleaned to prevent seizing by glass fiber residue.

All through-hull fittings and bolts, gaskets and mating flanges must be installed using recommended amounts of marine transom sealant. 3M Brand 5200 marine sealant or equivalent is recommended. Follow manufacturer's instructions with regard to surface cleaning and preparation.

Note: Twin Disc, Incorporated recommends that accepted standard installation and construction practices for marine components be followed throughout. The American Boat and Yacht Council publication, Safety Standards for Small Craft, provides useful general guidelines. This publication may be obtained from:

The American Boat and Yacht Council
613 Third Street
Suite 10
Annapolis, MD 21403, USA
www.abycinc.org

Thrust Unit Installation

In order to maximize drive efficiency, the lower 50% of the propeller should be immersed in the water when running at planing speeds. Because the flow pattern from a planning hull tends to move upward several inches from transom to the output end of the drive, a straight edge running aft from the hull bottom to the propeller will normally be *even with* or, for the larger drives *below* the *lower edge* of the thrust tube at its aft end. The thrust socket/ball must be positioned out of the water under planing conditions, which is the intent of these installation procedures. All through-transom holes must be drilled perpendicular to the transom outer surface to allow the mounting bolts/washers to seat flush against the drive flange.

⚠ CAUTION

The drive unit must be supported, as shown in Figure 2, at all times prior to trim cylinder final installation. Do not allow the ball joint/thrust tube to bottom against the thrust socket, as shown in Figure 3, as this can cause damage to the ball and socket bearings. The supporting mechanism must be capable of carrying the unit's weight, approximately 600 Kg (1300 lbs).

Note: When transom angle is other than 6 degrees to the vessel baseline and a wedge is to be used to mount the drive, Template 1019886H should be applied to the wedge and not directly to the transom.

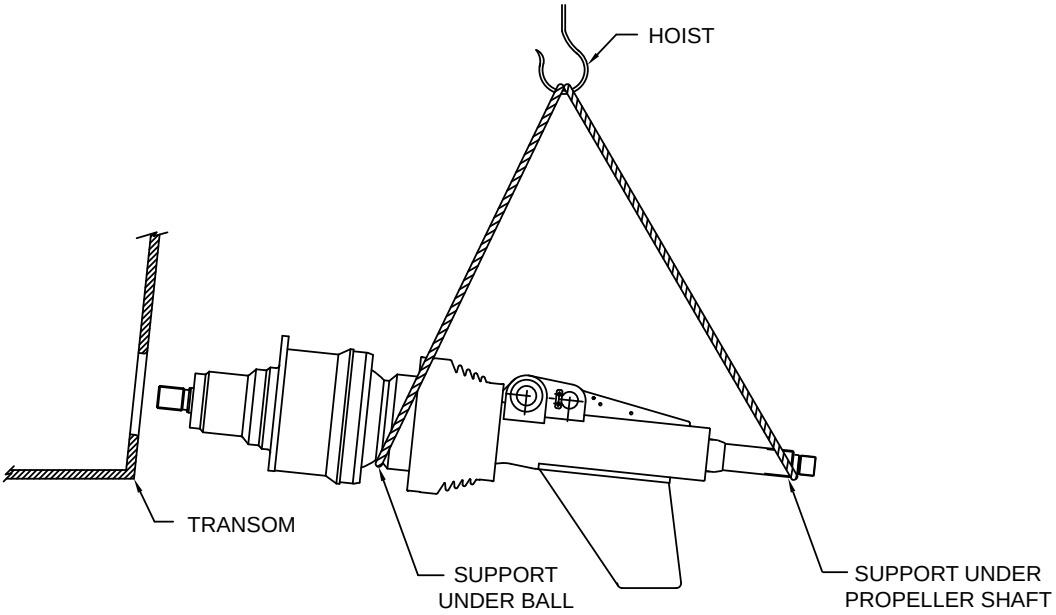

Figure 2. Support Unit for Installation

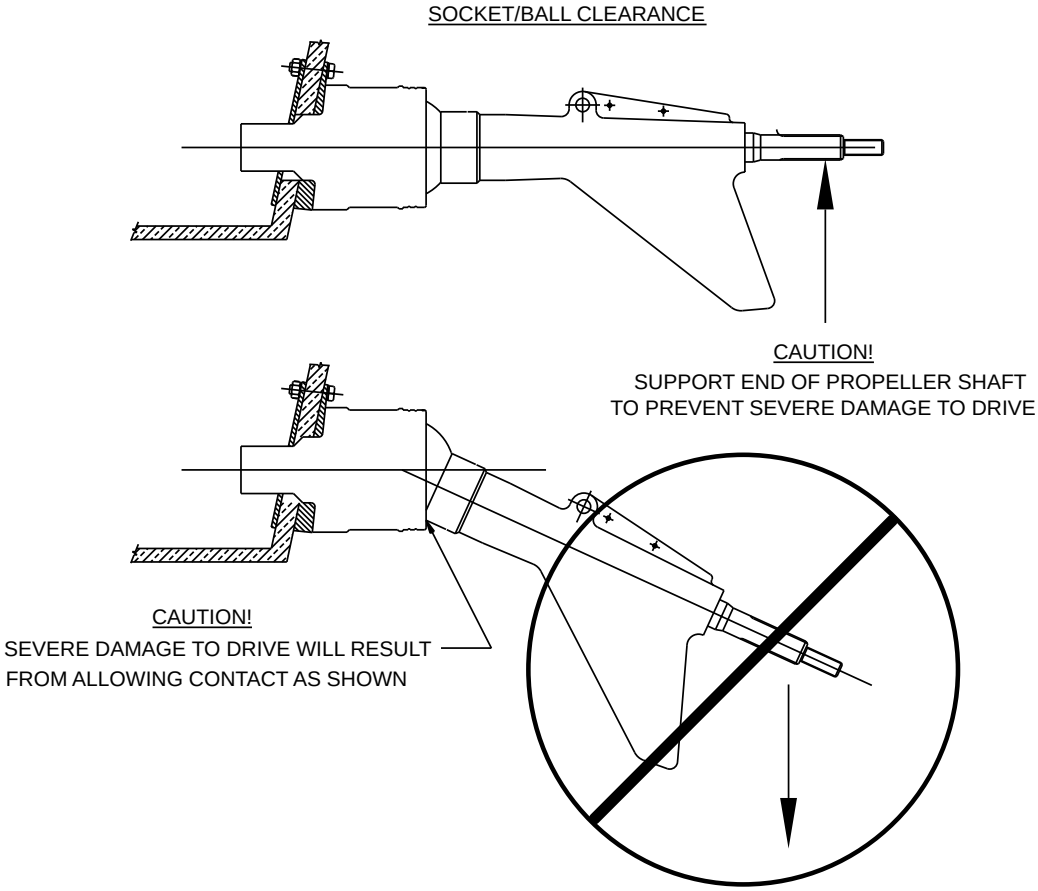

Figure 3. Protect Ball from Damage

1. Locate a vertical line(s) on the transom through the intended drive centerline(s) as follows: For twin drive installations, it is recommended that drive centerline(s) be located in-line with the engine centerline(s). For applications requiring offset drive mounting, contact Twin Disc, Incorporated, for recommendations. If at all possible, drive mounting holes should avoid stringers and other hull fittings that preclude the use of through-bolts. **See Engineering Drawing 1025928.**

2. Template 1019886H duplicates the cross section of the thrust socket and wedge (if applicable) and is used to locate the drive centerline for 1 in. socket clearance*.

   Note: When transom angle is other than 6 degrees to the vessel baseline and a wedge is to be used to mount the drive, Template 1019886H should be applied to the wedge and not directly to the transom.

   * Twin Disc, Incorporated may advise distance to be larger.

3. Use Template 1019886H to locate and mark drive centerline(s) as shown in **Figure 4**.

4. A For single drive installations, position centerline of Template 1019886H on transom centerline. Locate “Point C” on transom using template 1006631. Mark centers for mount holes (13), and lubrication holes (2).

4. B For twin drive installations, locate and match “Point C” on transom using template 1019886H. Rotate template until cutaway area on the thrust socket flange is parallel to the hull deadrise as shown in **Figure 5**. Locate and mark centers for mount bolts (13) and lubrication holes (2).

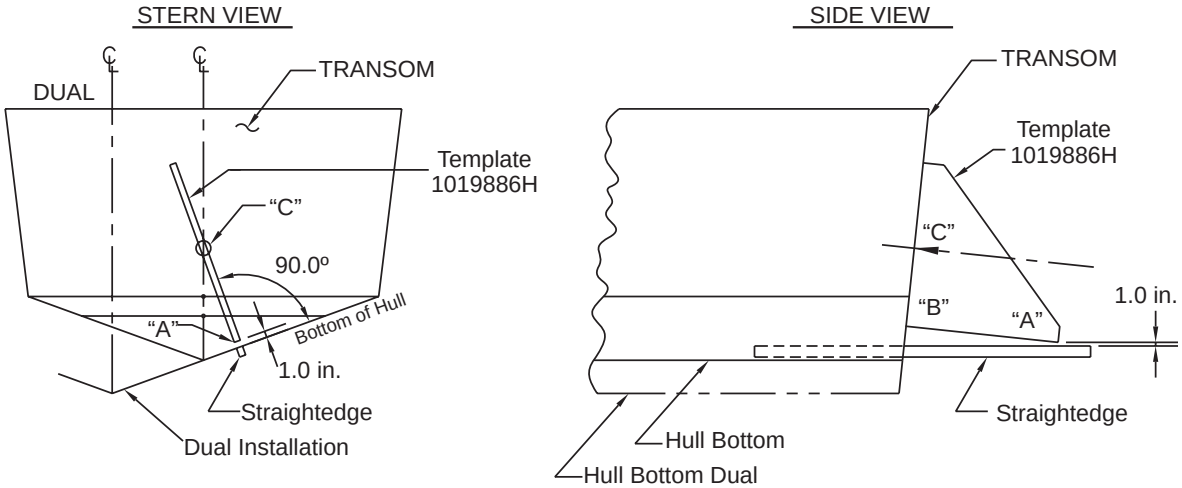

Figure 4. Mark Hull using Template 1019886H

5. Drill a pilot hole through the intended drive centerline (Point C). This pilot hole will be used for locating the actual drive through-hole and should be sized for the hole saw to be used in Step 6.

   The hole should be drilled at an angle to the transom that will make it parallel to the socket centerline. Template 1019886H can be used to orient the drill as shown.

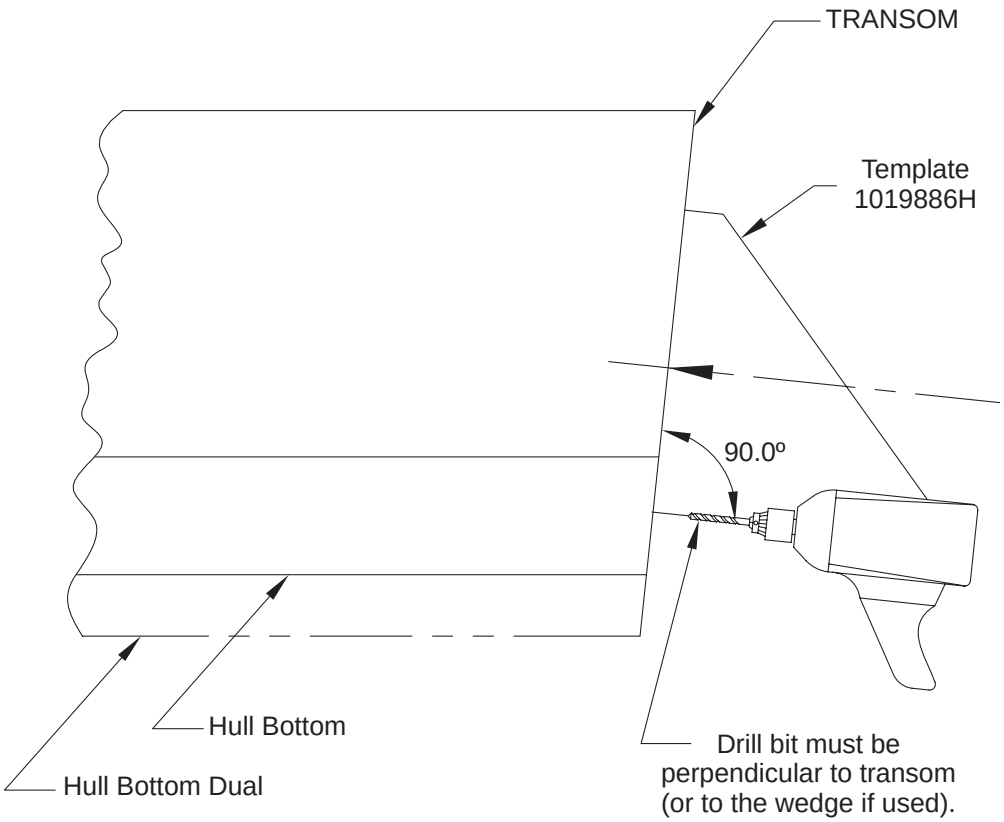

Figure 5. Drill Holes

6. Follow the pilot hole with a 343 mm (13.5 in) hole saw at the same angle used in Step 5.

7. Hold the thrust unit in place and verify 1 in. clearance* from the edge of the thrust socket to the plane of the vessel's bottom. Verify that the drive flange hole pattern matches the hole pattern marked on the transom from template 1006631.

   Note: The cutaway area on the thrust socket flange should be aligned parallel with the hull deadrise.

* The 1 in. clearance must be with the main drive boot in place.

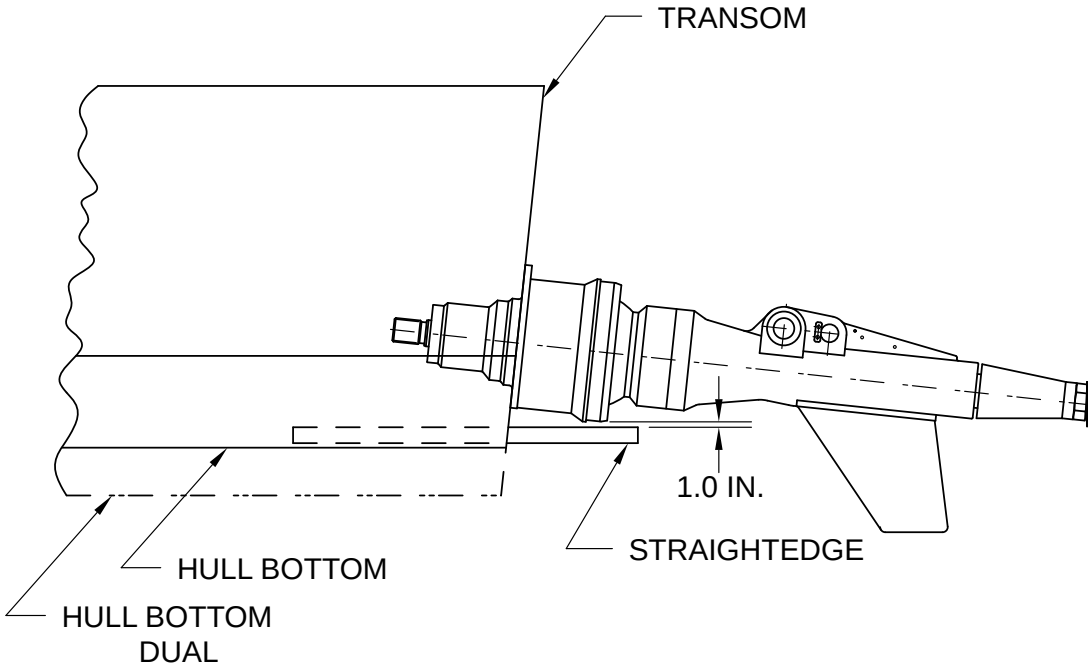

Figure 6. Measure for Clearance

8. Remove the drive unit and drill (13) 27 mm (1 1/16 in) and (2) 32 mm (1 1/4 in) diameter holes using template 1006631. (See note below) Holes should be drilled perpendicular to the transom.

   Note: Three (3) lubrication holes are shown on 1006631. Only drill the top hole and the lower of the two bottom holes.

9. Mount the basic drive unit (trim and steering cylinders not installed) using the backing plate and 1 in. diameter stainless steel bolts, nylock nuts, and washers as shown. Uniformly torque the nuts to 319 N-m (235 ft-lbs) using the tightening sequence on **Figure 8**. Apply a generous layer of marine transom sealant under the bracket and in the fastener holes to prevent water leakage. Do not turn the bolts when tightening them. Hold the bolts in place and only turn the nuts. If this procedure is not followed, leaks can develop in the holes.

   Note: The backing plate must be oriented with the spot-faced holes outward and with the stamped top upward*.

*Spot-faced holes are only on backing plates for drives with wedges.

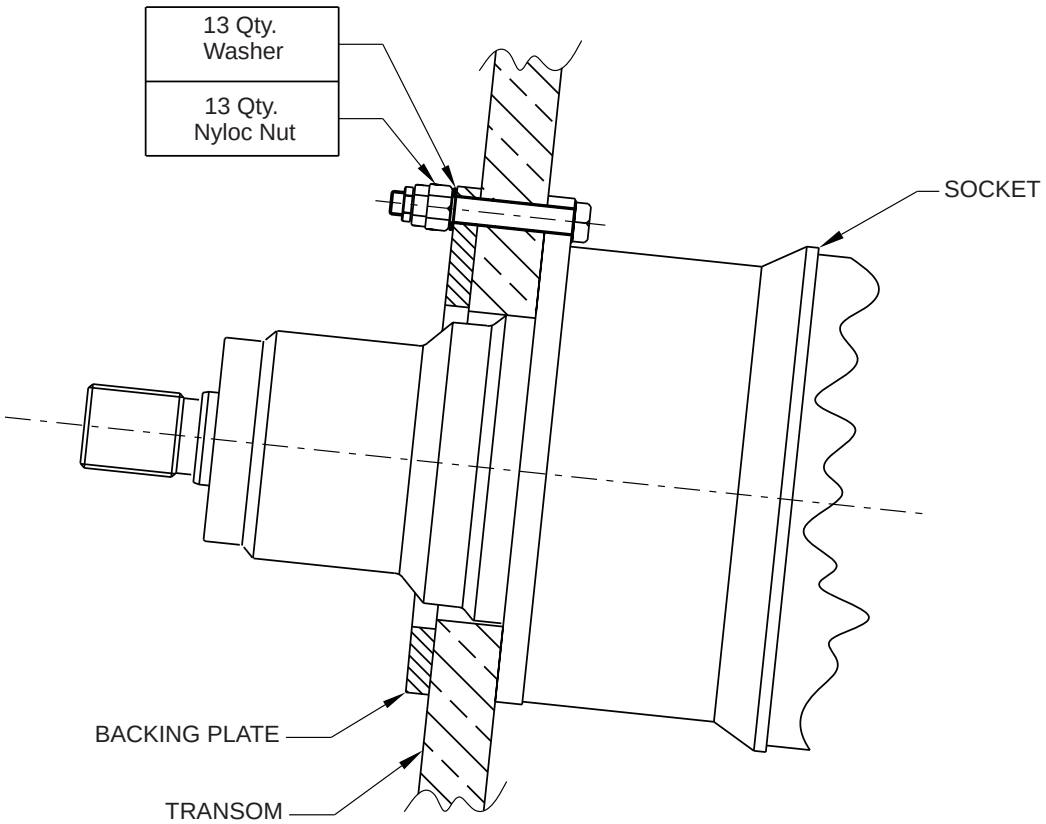

Figure 7. Drive Installation

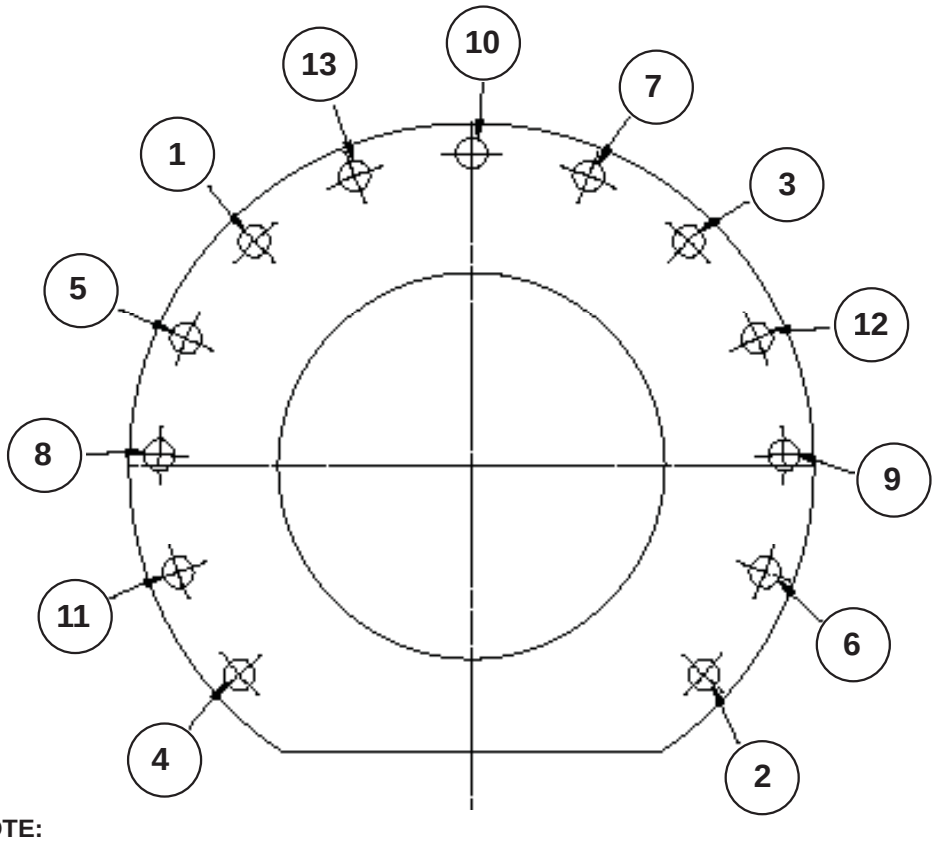

NOTE:
1) Torque to full value in 3 stages as follows:
   108 N-m (80 ft-lbs)
   217 N-m (160 ft-lbs)
   319 N-m (235 ft-lbs)
2) Recheck all bolts to a torque level of 319 N-m (235 ft-lbs.)

Figure 8. Torque Sequence for Socket to Hull

10. Install the input flange onto the drive unit. Torque the flange retainer bolts to 122 N-n (90 ft-lbs).

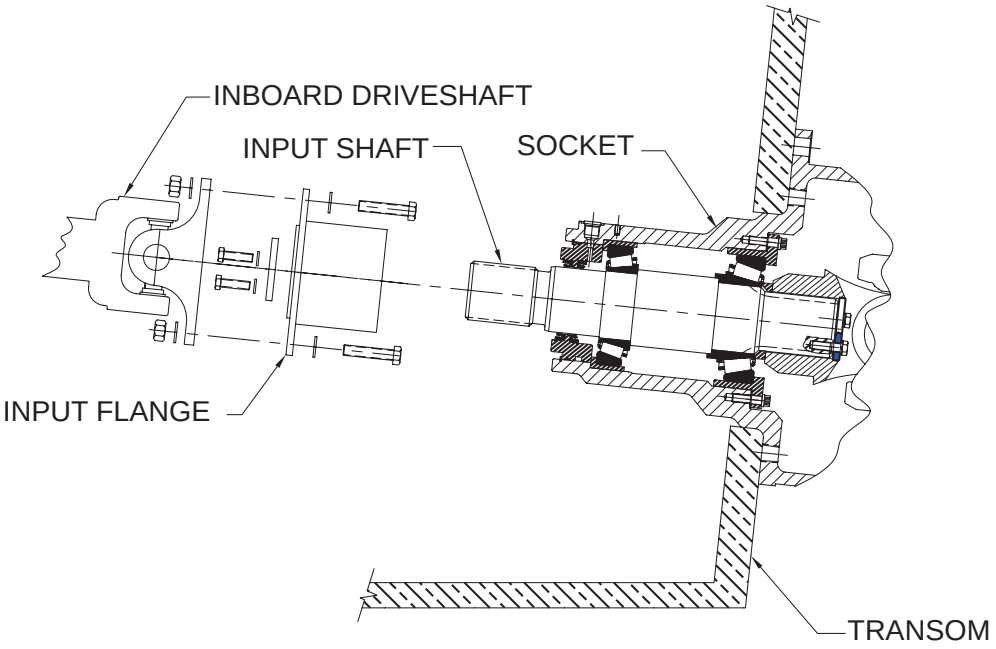

Figure 9. Input Flange Removal and Installation

Trim Cylinder Installation

The trim cylinder provides the capability to position the drive at differing trim angles depending on operating conditions. The following procedure sets the trim cylinder at mid-travel in the normal running position. **See Figure 15**.

1. Connect the trim cylinder to the thrust tube using the supplied mounting hardware. Center the trim yoke on the thrust tube with the shim washers provided. The assembly should have a small amount of side play. (See illustration below).

2. Loosen the hose clamps on the drive unit protective boot and rotate the tail housing as required to locate the fin in the vertical plane.

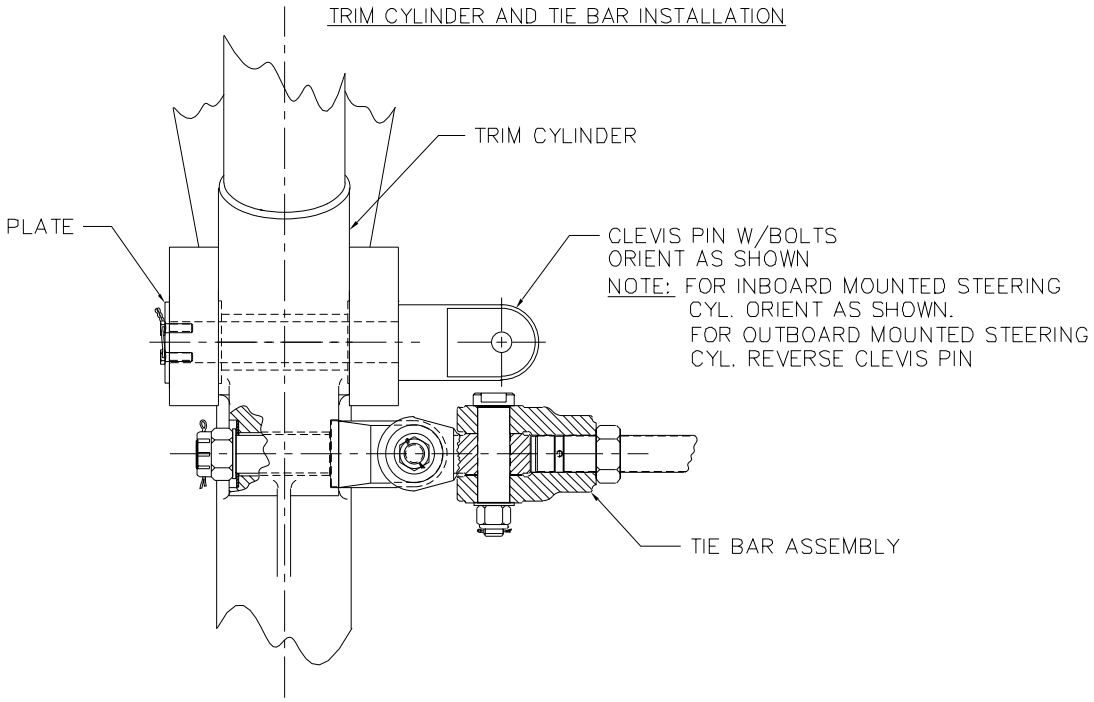

Figure 10. Trim Cylinder and Tie Bar Installation

3. Position the drive unit at the center trim height. This is determined by setting the drive unit ball joint in the exact center of the socket. Determine this measurement using the “drive center adjustment gauge” supplied with the package (Figs. 11 and 12). Lay the tool against the ball curvature and adjust the unit so that the tool fits evenly all the way around the ball circumference. This assures that the unit is in line with the socket and input shaft so that the entire unit is in a straight line. This is referred to as the neutral running angle.

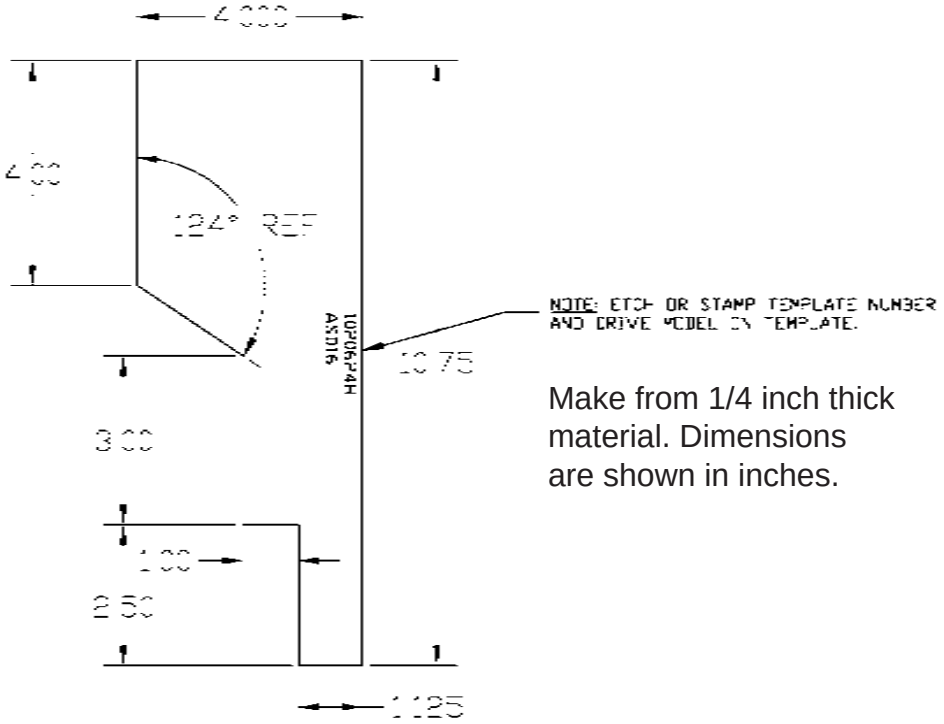

Figure 11. Centering Gauge 1020624H

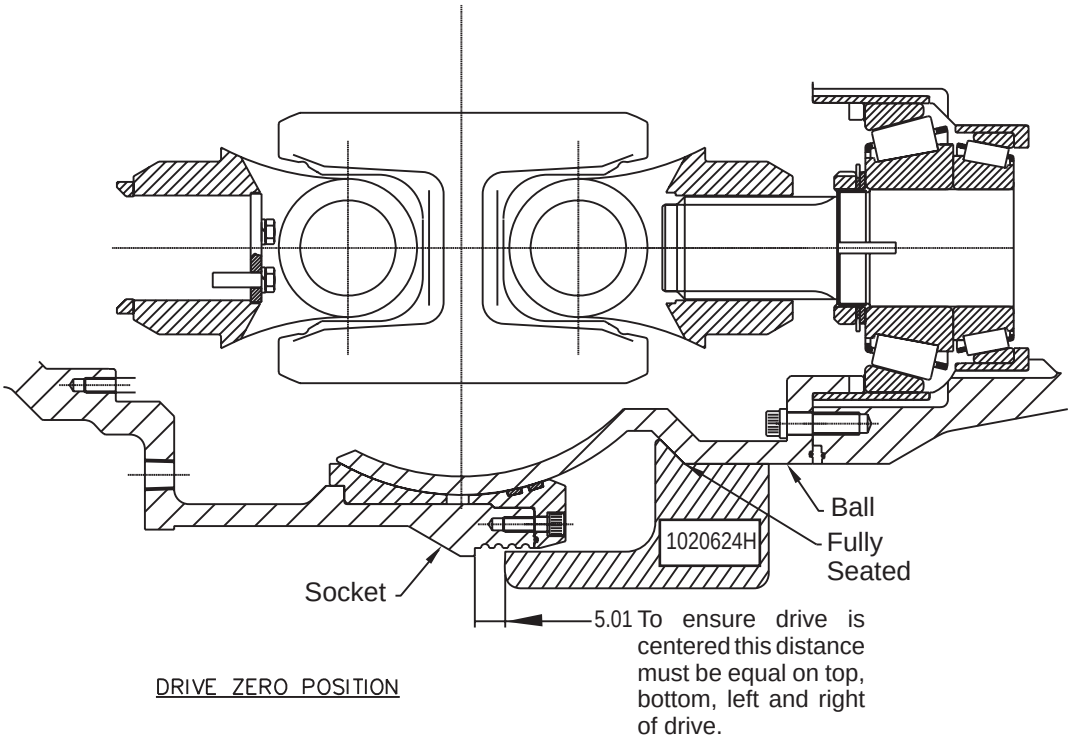

NOTE:

1) Position the ASD unit in the approximate center of the vertical and horizontal axis.
2) Using the gauge, check the clearance at 12:00 and 6:00 position.
3) Using the gauge, check the clearance at 3:00 and 9:00 position.
   Adjust the steering so the clearance is the same on each edge.

Figure 12. Center the Thrust Ball in the Socket

4. After the neutral running angle is determined, lay the trim transom bracket against the transom, making sure that the cylinder is still at the center travel location (**Fig. 13**). The center of the transom bracket should be aligned with the drive centerline.

5. Transfer the bracket hole pattern and drill the four 27 mm (1 1/16 in.) and two 25.4 mm (1.00 in.) diameter mounting holes as shown in **Fig. 13** and drawing 1011039 in the **Engineering Drawings section**. Mount the trim cylinder bracket with its backing plate and stainless steel 1 in. diameter bolts, nuts and washers. Torque the nuts to 320 N-m (235 ft.-lbs). Apply a generous amount of marine transom sealant under the bracket and in the fastener holes in the transom to prevent water leakage. Do not turn the bolts when tightening them. Hold the bolts in place and only turn the nuts. If this procedure is not followed, leaks can develop in the holes

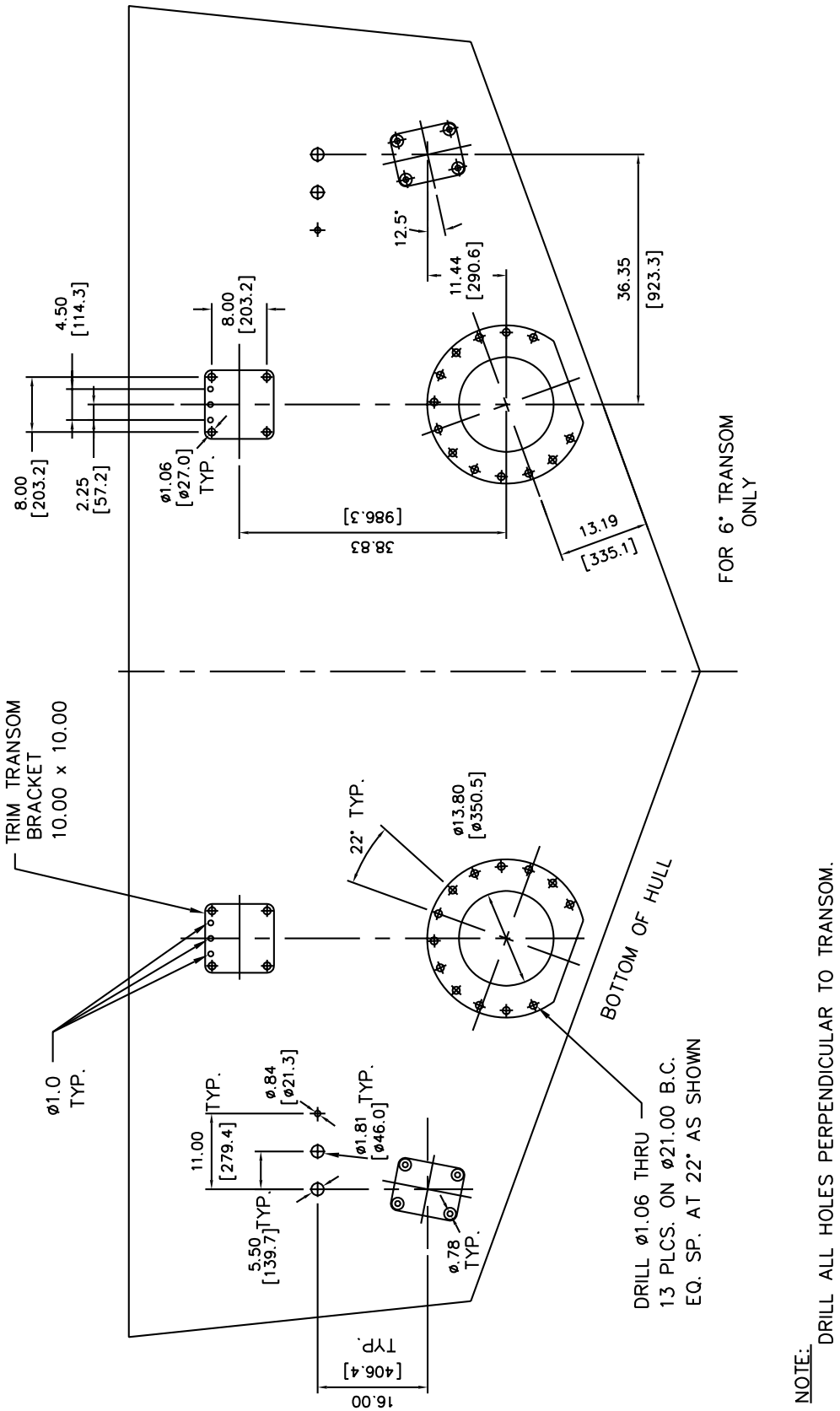

Figure 13. Transom Layout - Dual Drive

Steering Cylinder Installation

The following installation procedure positions the steering cylinders to allow maximum steering capability without damage to the drive. The steering cylinders should reach both travel limits just prior to the ball/thrust tube contacting the socket (at all trim cylinder positions).

On single drive installations, the steering cylinder must be located to offset the effects of the propeller torque. If propeller rotation is clockwise as viewed from the rear, the cylinder must be located on the starboard side. The cylinder must be on the port side for counterclockwise rotation.

On twin drive installations, each of the steering cylinders may both be inboard or both be outboard of the drives.

1. Position the drive in the neutral trim position and parallel to the vessel centerline. See **Figure 12**. Attach the steering cylinder clevis to the trim yoke pin with the hardware supplied. See **Figure 14**. Torque nut to 57 N-m (40 ft-lbs).

2. Set the steering cylinder to the mid-travel location and position the steering cylinder mounting bracket on the transom. **See Figure 13** and **Engineering Drawing 1025928**. The height and orientation of the mounting bracket should be such that the mounting bracket, the clevis, and the rod end are as close to centered as possible. For hulls with moderate deadrise, this height is usually dictated by clearance from the hull bottom.

   Note: If at all possible, the mounting bracket holes should avoid stringers, the hull bottom and any hull fittings that preclude the use of through bolts. Mark the location/ orientation of the mounting bracket with a straight line approximately 30.48 cm (12 in) long.

3. Slide the ball protective boot back from the thrust socket. The trim cylinder should be supporting the weight of the thrust tube. Remove the plastic gauge from the steering cylinder and compress the steering cylinder completely. Push the drive in the direction of the steering cylinder, allowing a 6 mm (1/4 in) clearance between the thrust ball and socket. Place the steering cylinder bracket against the transom and mark the location. Do not readjust the trim cylinder, keep it at the mid-position. Mark the bracket outline on the transom.

4. Pivot the drive horizontally in the other direction, extend the cylinder completely, and repeat the procedure. Do not adjust the trim cylinder, keep it at the mid-position. Let it swing with the thrust tube. Mark the steering cylinder bracket outline on the transom.

5. Position the mounting bracket at the center of these two marks. Transfer the steering bracket hole pattern and drill four 27 mm (1.0625 in) and two 24 mm (0.94 in) diameter holes as shown in **Figure 13** and **Engineering Drawing 1025928,** and drawings 1019816-2 metric (-1 SAE) in Engineering Drawings section. Mount the steering cylinder bracket with its backing plate and stainless steel 1/2 in. diameter bolts, nuts, and washers. Torque nuts to 922 N-m (680 ft-lbs). Apply a generous layer of marine transom sealant under the bracket and in the fastener holes in the transom to prevent water leakage. Do not turn the bolts when tightening them. Hold the bolts in place and only turn the nuts. If this procedure is not followed, leaks can develop in the holes.

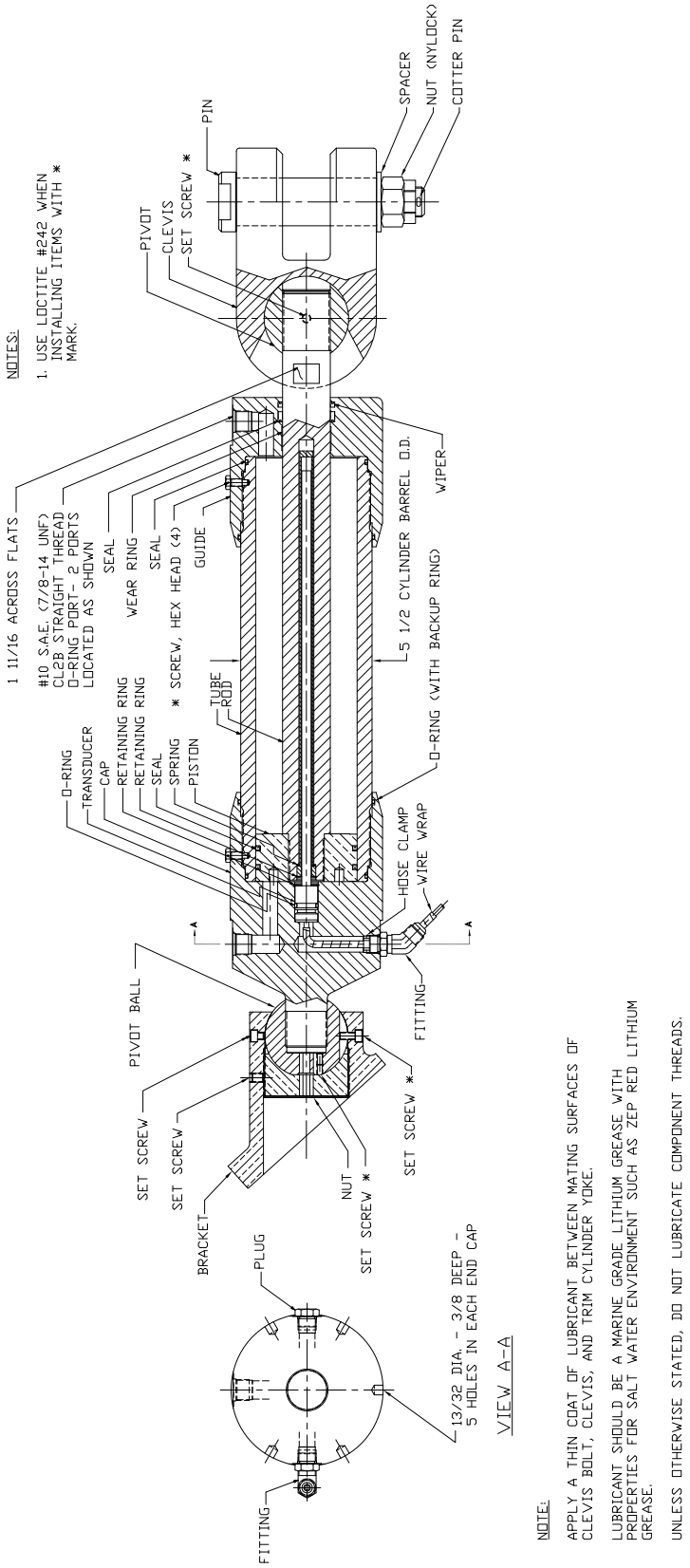

Figure 14. Steering Cylinder

6. A tie bar is required for twin drive installations on mono hull vessels. When ordering the tie bar, specify drive centerline-to-centerline distance. Installation of the tie bar is per **Figure 10** using the mounting hardware provided. Comply with all requirements and torque values shown in **Figure 15**. Adjust the length of the tie bar as required to make the drive thrust housings parallel. Torque tie bar jam nuts.

7. Once the trim cylinders, steering cylinders, and tie bar are installed, cycle the units in all directions to check all the clearances at the thrust ball, cylinder transom mounting brackets, steering cylinder clevis, and tie bar clevis to assure no contact is made between the pivoting and stationary components. Critical positions to check are when the drives are steered fully to port and fully to starboard with the drives trimmed both fully up and fully down (four total check positions).

8. Slip the thrust ball boot back over the socket and tighten the boot clamps. Verify that the boot is not twisted.

INSTALLATION NOTES:

1) APPLY LUBRICANT TO "THREADED ROD" AND BOTH THRUST TUBE PINS. USE A MARINE GRADE LITHIUM GREASE, FORMULATED FOR USE IN SALT WATER. (TWIN DISC RECOMMENDS "RED LITHIUM GREASE" AVAILABLE FROM ZEP MANUFACTURING CO., ATLANTA, GEORGIA, USA. OR AN EQUIVALENT PRODUCT.)

2) APPLY A LIBERAL COATING OF LUBRICANT TO BOTH THRUST TUBE BORES. PLACE THRUST TUBE PINS INTO THRUST TUBES. WHEN INSTALLING, ALIGN ANTI-ROTATION KEY AND DOWEL PINS WITH THE MATING HOLES IN THE STARBOARD THRUST TUBE. SECURE BOTH PINS WITH WASHERS, NUTS, AND COTTER PINS AS SHOWN.

IMPORTANT: WHEN PROPERLY INSTALLED, THE STARBOARD PIN SHOULD BE SECURED FROM ROTATION - THE OTHER, PORT PIN SHOULD ROTATE FREELY WITHIN THE PORT THRUST TUBE BUSHING.

3) ASSEMBLE CLEVISES WITH BORES AND PIN BODY LIBERALLY LUBRICATED (DO NOT LUBRICATE CLEVIS PIN THREADS). SECURE CLEVIS PINS WITH WASHERS, NUTS, AND COTTER PINS.

4) THREAD BOTH NUTS INTO THE MIDDLE OF THREADED ROD. PLACE A WASHER ON EITHER SIDE OF NUTS, AND PLACE ONE DOWEL PIN (LUBRICATED) INTO EACH TIE BAR TUBE. ALIGN THE APPROXIMATE CENTER OF THE SLOT WITH THE SET SCREW HOLE IN THE LONGER TUBE ASSEMBLY, AND LOOSELY INSTALL A SET SCREW. TIGHTEN NUTS TO ABOUT 50 FT-LBS (65 N-M).

5) INSTALL THE SHORT (PORT) TUBE ASSEMBLY WITH A DOWEL PIN, AND ADJUST THE TUBE SUB-ASSEMBLY TO THE DESIRED LENGTH. DO NOT TIGHTEN SET SCREWS AT THIS TIME. THE THREADED ROD SHOULD BE SOMEWHAT CENTERED BETWEEN THE TUBES. VERIFY THAT THE ROD EXTENDS BEYOND THE ø1/4 WITNESS HOLES IN EACH TUBE.

6) ASSEMBLE THE TIE BAR CENTER SECTION TO THE CLEVISES WITH THE REMAINING TWLEVIS PINS, LUBRICATED AS BEFORE. CHECK AND RE-ADJUST THE LENGTH TO ACHIEVE THE DESIRED SPAN BETWEEN PROPELLER SHAFT CENTERS. APPLY LOCTITE TO THE SET SCREWS AND TORQUE ALL FASTENERS TO THE REQUIRED VALUES. INSTALL FOUR COTTER PINS.

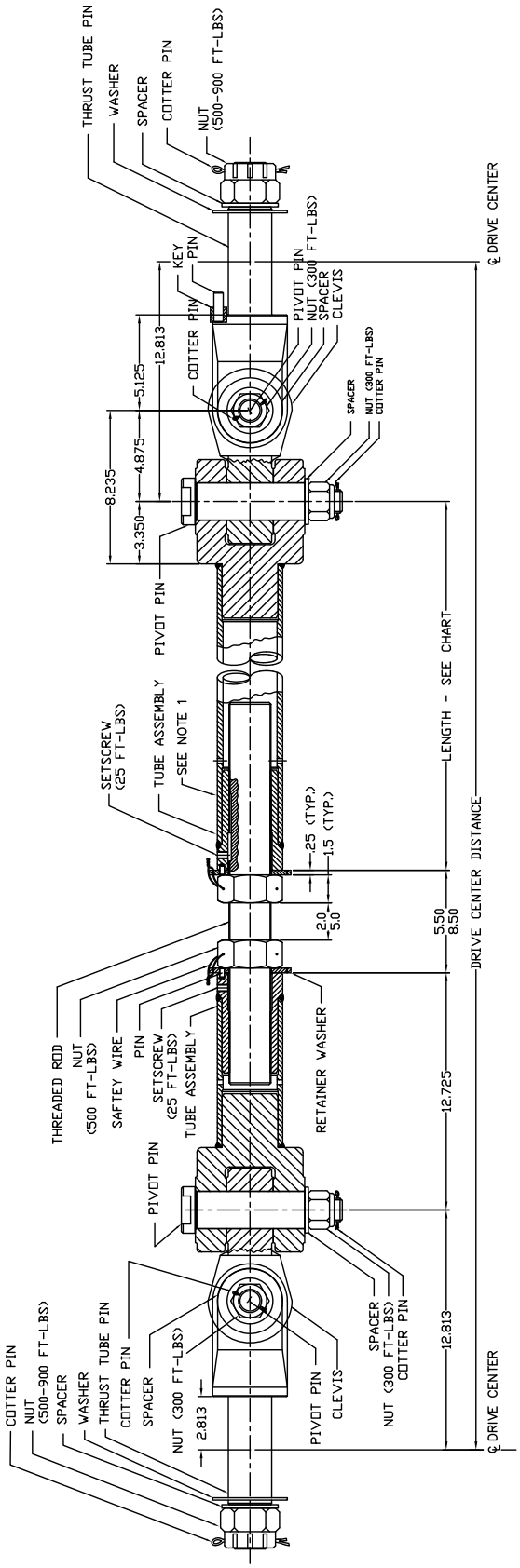

Figure 15. Tie Bar Assembly

Cylinder Transducer Installation

The driveline between the transmission output shaft and the ASD16 Arneson Drive input shaft must be properly aligned for maximum life and minimum vibration.

Note: ICT transducer and EICT Signal conditioning module can be up to 10 m. away, no further. 4 m extension cables are available from Twin Disc if the standard length (6 m.) is not sufficient.

Penny+Giles

INNOVATION IN MOTION

EICT

Installation and set-up guide

Model **EICT** is the Signal Conditioning Unit for Penny + Giles **ICT** and **SLT** range of linear displacement transducers. It will only drive the transducers with an appropriate Sensor Calibration Module Card **(SCMC)** fitted.

Important Note: It is essential that Steps 1 to 7 are completed before connecting a power supply to the EICT. Incorrect connections may destroy EICT on power up.

Step 1 Remove the four retaining screws to release the cover. Note the position of the gasket in the cover. Identify the Sensor Calibration Module Card **(SCMC)** supplied with the transducer. Insert the **SCMC** card into position **JP1**. (See Fig.1)

Step 2 Refer to the Power Supply Voltages v Output Options Matrix chart below to establish the MAXIMUM and MINIMUM power supply voltage parameters

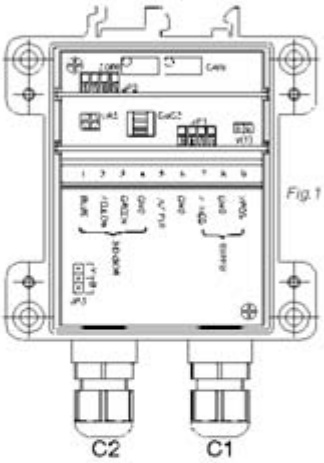

Fig.1

CONFIGURATION	PERMISSIBLE SUPPLY VOLTAGE RANGE	POSSIBLE OUTPUT SIGNALS	EXPLANATORY NOTES
EICT ONLY (NO OPTION CARD FITTED)	VPOS = +10 to +60 Vdc	+0.5 to +4.5 Vdc	The 60 Vdc supply voltage is permissible ONLY when NO option card is fitted
EICT WITH CM (CURRENT) OPTION CARD FITTED	VPOS = +10 to +30 Vdc	4-20mA	Current is sourced to ground with a compliance voltage of VPOS -4V
EICT WITH VM (VOLTAGE) OPTION CARD FITTED	VPOS = +10 to +30 Vdc (SEE NOTE A BELOW)	-10 to 0 Vdc	An internal negative rail generator enables output voltages of zero and below to be achieved.
		-5 to 0 Vdc	
		-5 to +5 Vdc	
		-2.5 to +2.5 Vdc	
		0 to +5 Vdc	
	VPOS = +13.5 to +30Vdc (SEE NOTE A BELOW)	-10 to +10 Vdc	The supply voltage must be at least +13.5V to obtain these output voltages
		-7.5 to +7.5 Vdc	
		0 to +10 Vdc	

Note A: Dual supply
The EICT, with or without option cards fitted, requires only a single supply voltage connected between **GND** and **VPOS**. When the **VM** (Voltage Module) option card is used, an internal negative rail generator enables zero and negative output voltages to be achieved.
In some situations an external negative supply in the range -10V to -30Vdc may be available (e.g. where the EICT is being used to replace an earlier model of signal conditioner). It is permissible

to connect this voltage to **VNEG**, in which case the internal negative supply generator on the **VM** option card will be disabled and current will be drawn from the external supply.
To obtain outputs of -10Vdc or -7.5Vdc, the external negative supply should be at least -13.5Vdc.

Note B: Adjustment range
Zero pot approximately 20 turns. Adjustment range = -10% to +60% of nominal sensor range.
Gain pot approximately 20 turns. Adjustment range = +40% to +110% of nominal sensor range.
Minimum sensor range is 50% of nominal sensor range.

Unscrew cable glands **C1** & **C2**. (See Fig.1). See note [4] regarding cable diameter.

Single Supply - Pass power supply cable through gland **C1** into **'SUPPLY'** zone on **EICT** board. Connect the power supply lead carrying the most POSITIVE potential (e.g. +24Vdc) to Terminal 9 **[VPOS]**. Connect the power lead carrying 0V to Terminal 8 **[GND]**.

Dual Supply - As Single Supply, BUT, connect most negative power lead (e.g. -15V) to Terminal 7 **[VNEG]**. See note [1] for 4-20 mA output.

A power supply cable screen can be connected to Terminal 6 **[GND]**. This is recommended but optional. Consult your systems engineer if other options required.

Firmly tighten cable gland lock nut **C1**.

Step 3 Pass the transducer cable through gland **C2** into **'SENSOR'** zone on **EICT** board. Connect the transducer to the terminals on the **EICT** board, as indicated below and shown in Fig.1 & Fig. 5.

Terminal 1 - **BLUE**	[Coil –ve]
Terminal 2 - **YELLOW**	[Coil +ve]
Terminal 3 - **GREEN**	[Case] See Note [2]
Terminal 4 - **Screen**	[Cable Screen] See Note [2]

If a connector option is required, either fitted to the transducer cable by a connector adapter kit or any other connector system, refer to Notes [3], [4] & [5].

Firmly tighten cable gland lock nut **C2.**

Step 4 Locate 'jumper' **JP3** on **EICT** board (see Fig.1). This determines the 'sense' of the voltage/current output with respect to the transducer core position. Locate the 'jumper' in the required position (See Fig. 2). The **EICT** is factory set with **JP3** in position **'A'**.

Fig. 2

JP3

'Lo' Retract (e.g.0.5V) 'H' Extend (e.g. 4.5V) Position A

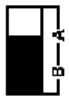

JP3

'H' Retract (e.g. 4.5V) 'Lo' Extend (e.g.0.5V) Position B

Step 5 Locate **JP2** on **EICT** board (see Fig.1).
If required signal output is 0.5 - 4.5Vdc or 4 - 20 mA (i.e, no Voltage Module (**VM**) output option card is fitted), fit 'jumper' into position **JP2** (across terminals 1 & 2). The **EICT** is factory set with 'jumper' fitted in this position. Proceed to Step 7.

If required **VOLTAGE** signal output is anything other than 0.5 - 4.5Vdc (An additional Voltage

Module **(VM)** output option card is required) then remove 'jumper' from **JP2** and store on **V(T) LINK PARK** terminals. (see **Fig.1**)

Step 6 If Voltage Module **(VM)** output option card is selected, identify the **VM** card. Locate **DIP** switch on **VM card.** (See Fig. 3) Select the required sensor output voltage, using the Switch Position Matrix Guide (see Fig.4), and set the DIP switch positions accordingly.

Insert Voltage Module **(VM)** output option card into position **JP2.** Proceed to Step 7.

If a Current Module **(CM)** output option card is to be fitted, **do not** attempt to insert the card now. Proceed with Steps 5, 7, 8 & 9 as for 0.5 - 4.5Vdc output requirement, as if **NO** output option card is fitted. Then, proceed to Step 10.

Step 7 Connect a DMM to :-
Terminal 5 **(OUTPUT)** +V Output
Terminal 6 **(GND)** (0V) Ground
Set DMM range to measure output voltage.

Step 8 Move transducer core to the fully 'Lo' position (See Step 4 and Fig. 2) and power up the **EICT**. Adjust **'ZERO'** trim pot until the required output voltage is achieved on the DMM display. (0.5Vdc if no output option cards are fitted in **JP2**)

For Dual Supply option. Output over the full range, relative to ground (**'GND'** 0V) will appear on Terminal 5 **'OUTPUT'**. (e.g. In the case of a -10V to 0 to +10V range, the output can be trimmed to -10V using the **'ZERO'** trim pot.)

Fig. 4 Switch position matrix guide

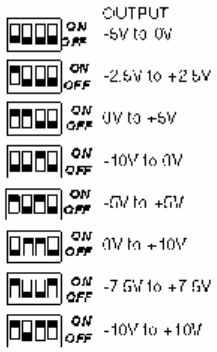

Fig. 3

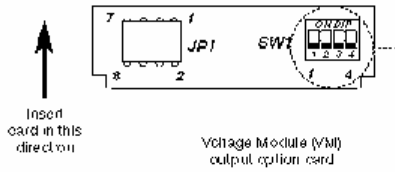

Fig. 5

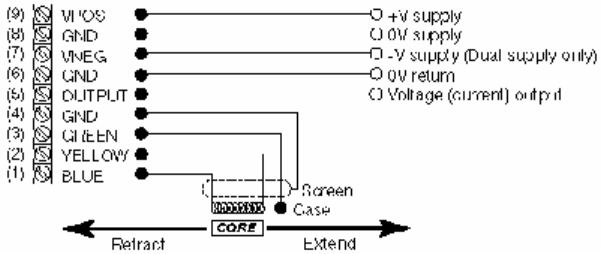

Step 9 Move transducer core to the fully 'Hi' position and adjust **'GAIN'** trim pot until required output voltage is achieved.(4.5Vdc if no output option cards are fitted in **JP2**)

For Dual Supply option. Output over the full range, relative to ground (**'GND'** 0V) will appear on Terminal 5 **'OUTPUT'**. (e.g. In the case of a -10V to 0 to +10V range, the output can be trimmed to +10V using the **'GAIN'** trim pot.)

NOTE: ***When trimming use 'ZERO' trim pot to set the 'most negative' end and 'GAIN' trim pot to set the 'most positive' end of the output signal.***

Step 10 If Current Module **(CM)** output option card is selected, ensure steps 5, 7, 8 & 9 have been completed. Switch off power supply to **EICT**. There are no user-configurable options on the Current Module **(CM)** output option card.

Remove 'jumper' from **JP2** and store on **V(T) LINK PARK** terminals. (see Fig.1) Insert Current Module **(CM)** output option card into position **JP2**. Change DMM (already connected between terminals 5 & 4) range settings to measure a **4 - 20mA** current output. Power up **EICT**.
Check that output is **4 - 20mA** over the stroke of the transducer core.

If adjustment is required :-
Move transducer core to the fully 'Lo' position (See Step 4 and Fig. 2). Adjust **'ZERO'** trim pot until the required output current (4mA) is achieved.
Move transducer core to the fully 'Hi' position and adjust **'GAIN'** trim pot until required output current (20mA) is achieved.

Step 11 Switch off power to **EICT**.
Remove DMM from Terminal 4 & 5.
Replace cover using screws removed, ensuring all gaskets are present and in the correct place.

Step 12 Optional, but recommended. Use an indelible pen to mark the configuration settings you have selected, in the appropriate label area shown on the **EICT** housing cover. (EICT type; V o/p [if applicable]; transducer type)

Step 13 The transducer and **EICT** are now ready for use. Refer to **EICT** Technical data sheet for full specification, mounting options and dimensions.

Notes

1 Current Module **(CM)** (4 - 20 mA) 'set-up' is unaffected by Dual Supply option. Continue to follow set-up guide steps.

2 Recommended connections, but optional. Consult your Systems Engineer should other options be required.

3 Make a note of, and check, the transducer cable colour codes (see Fig. 5) relative to the assigned connector termination identities, to enable the **EICT** to be correctly connected.

4 Cable diameter must be between 2.5 and 6.0mm diameter to maintain IP66 rating of the **EICT** housing.
Make off cable elements to the connector.

5 ***Rapid integrity check for connector and/or transducer.***
EICT *must be disconnected from the transducer to carry out following check!*
Using a DMM, set to the resistance range:
(See Fig. 5 for transducer cable colour coding)
i) Measure between connector terminals assigned to transducer 'yellow' and 'blue'.
Value should lie between 40Ω and 170Ω.
ii) Measure between connector terminals assigned to transducer 'green' and 'yellow' and/or 'blue'.
Value should be 'open circuit'.
iii) Measure between connector terminal assigned to 'green' and the transducer body.
Value should be 'short circuit'.
iv) 'Screen', if used - Connector terminal assigned to 'screen' should be 'open circuit' to all the other connector terminations and transducer body unless otherwise specified by your Systems Engineer.

6 Any problems or questions should be e-mailed to sales@pennyandgiles.com

For technical assistance contact your local distributor or Penny+Giles at

UK	*Tel: +44 (0)1202 409409*	*Email: sales@pennyandgiles.com*
USA	*Tel: +1 562 531 6500*	*Email: us.sales@pennyandgiles.com*

Web: www.pennyandgiles.com

Driveline Installation

The driveline between the transmission output shaft and the ASD16 Arneson Drive input shaft must be properly aligned for maximum life and minimum vibration.

1. The transmission output shaft centerline must be parallel to the ASD16 input shaft centerline or if offset, the angle between the transmission output shaft centerline and the driveline must equal the angle between the driveline and the ASD16 input shaft centerline. The angular offset between the transmission output shaft centerline and the driveline centerline must not exceed the recommendation of the driveline manufacturer. The angular offset between the transmission output shaft centerline and the driveline centerline must be within one half degree of the angular offset between the driveline centerline and the ASD16 input shaft centerline.

2. Both ends of a two piece driveline must be in phase with each other. The correct orientation of the yoke arms on each end of the driveline is for them to be parallel to each other. Most drivelines contain a “slip spline” between the two ends, and the male and female sides of the slip spline may be capable of assembly at random angular positions. It is very important to maintain the two yoke ends parallel when reassembling the driveline after service.

3. Examples of proper and improper alignment are shown on **Figure 18 and 19.**

A Method of Alignment

A method of alignment is listed here to aid in proper alignment or checking an existing installation for proper alignment. The ASD16 input shaft centerline will be fixed as it is located and bolted to the vessel’s transom. The engine and marine transmission must be adjusted so that the output shaft centerline is parallel to the ASD16 input shaft centerline, and the offset angle is within the proper limits.

1. Fabricate pointer plates that can be mounted to the same transmission output flange adapter that the driveline will connect to, and to the ASD16 input flange that the driveline will connect to.

2. Fabricate inner hollow tubes and outer hollow tubes, and weld pointers (indicator ends) onto inner shafts.

3. Drill a hole in same length outer tube and then weld a nut to the tube. This will be used as the retention device for the inner tube once the inner tube is slid into the outer tube.

4. Weld the tube assemblies to the plates, making sure that the tube to plate runout is zero. This will allow for adjustment of both shafts to identical lengths. Make sure there is a tight fit between the outer tube and inner tube (the closer the fit the more accurate the alignment will be).

5. Bolt one pointer onto the transmission output shaft flange. Bolt the other pointer onto the ASD16 input shaft flange. These pointers are an extension of the shaft centerlines on which they are mounted. If the installation requires that the transmission output shaft centerline is not parallel to the ASD16 input shaft centerline, adjust both pointers to the same lengths so the pointed end (indicator reference end) of the inner shafts are in close proximity to each other. Once this is completed use a dial indicator making sure that the run out on the pointers are no greater then 1.59 mm (0.0625 in). It will be necessary to check runout on both shafts by turning them each 360°. The engine and transmission package must be adjusted so that the pointer ends meet each other.

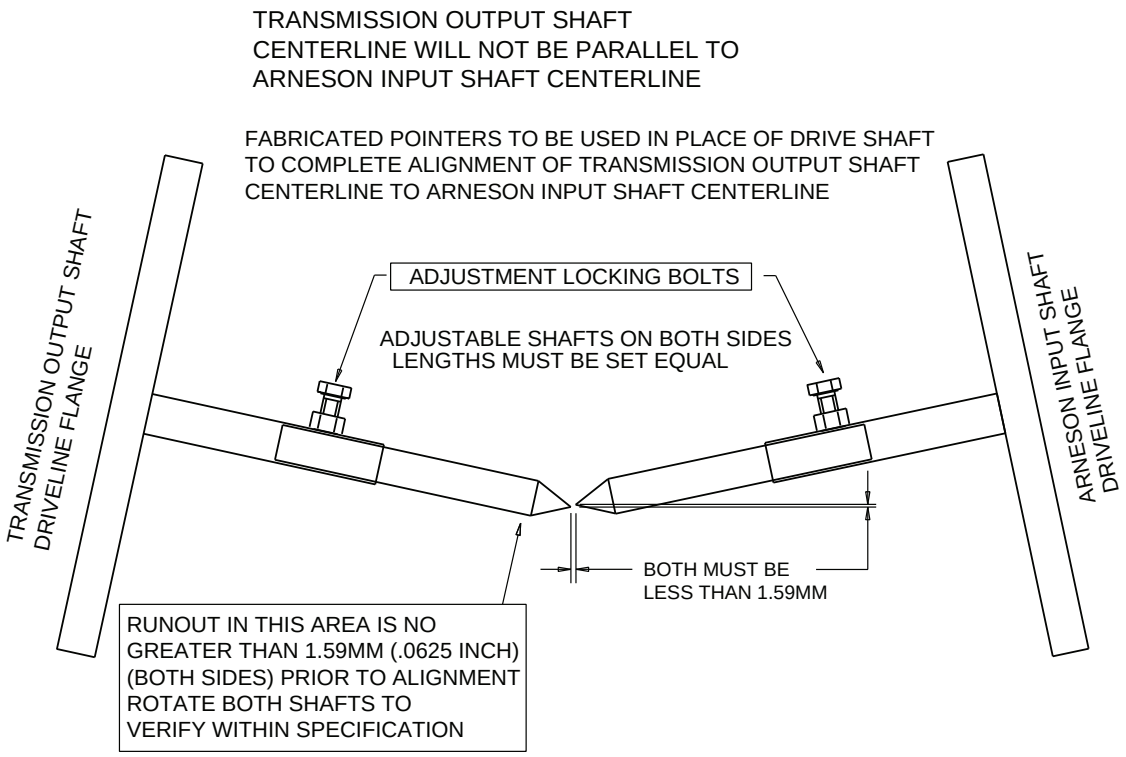

Figure 16. Remote or Island Mounted Alignment Tool, Shafts Not Parallel

6. If the engine and transmission package can be adjusted so that the transmission output shaft centerline will be parallel to the ASD16 input shaft centerline, the engine and transmission package must be adjusted so that the two rods are parallel to each other. The rods can be lengthened as long as the runout is within the allowable limits to ease in the adjustments.

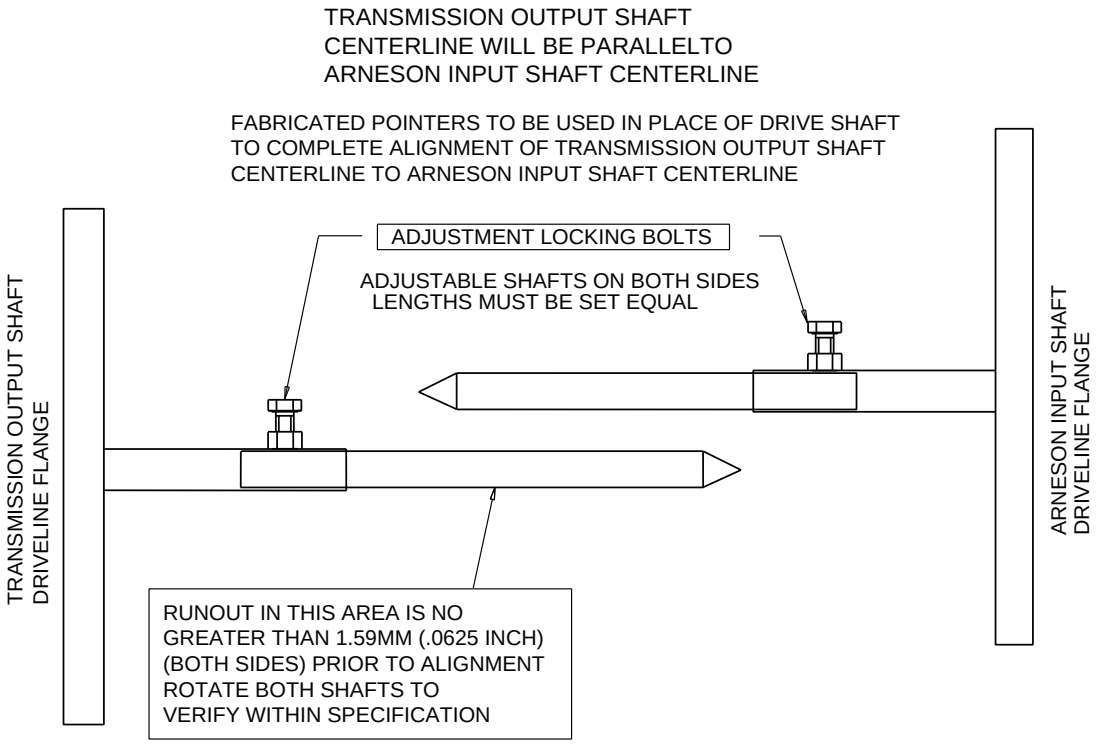

Figure 17. Remote or Island Mounted Alignment Tool, Shafts Parallel

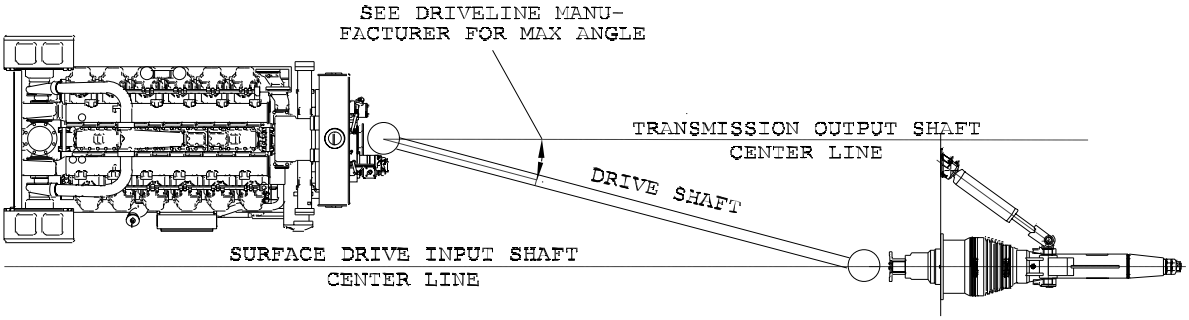

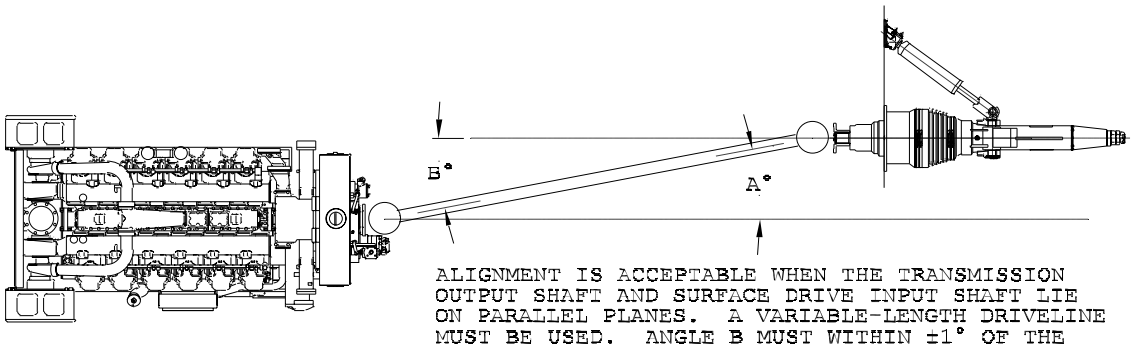

ALIGNMENT IS ACCEPTABLE WHEN THE TRANSMISSION OUTPUT SHAFT AND SURFACE DRIVE INPUT SHAFT LIE ON PARALLEL PLANES. A VARIABLE-LENGTH DRIVELINE MUST BE USED. ANGLE B MUST WITHIN ±1° OF THE VALUE OF ANGLE A.

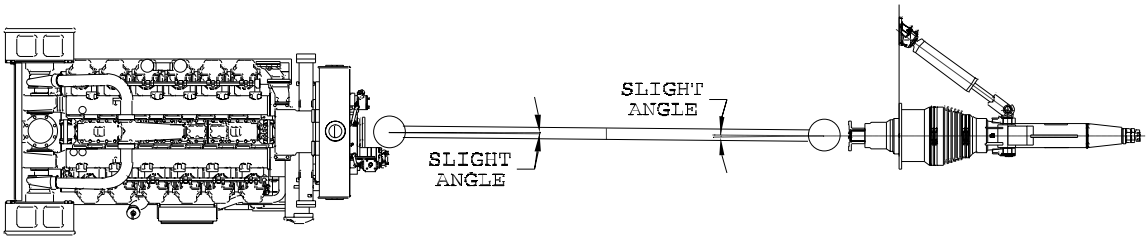

CORRECT ALIGNMENT BETWEEN TRANSMISSION OUTPUT SHAFT AND SURFACE DRIVE INPUT SHAFT. THE TRANSMISSION SHAFT AND SURFACE DRIVE SHAFT LIE ON THE SAME PLANE IN THIS PLAN (FROM THE TOP) VIEW. A VARIABLE LENGTH DRIVELINE MUST BE USED. NOTE: A SLIGHT ANGLE (ABOUT 1/2°) WILL MAXIMIZE U-JOINT BEARING LIFE.

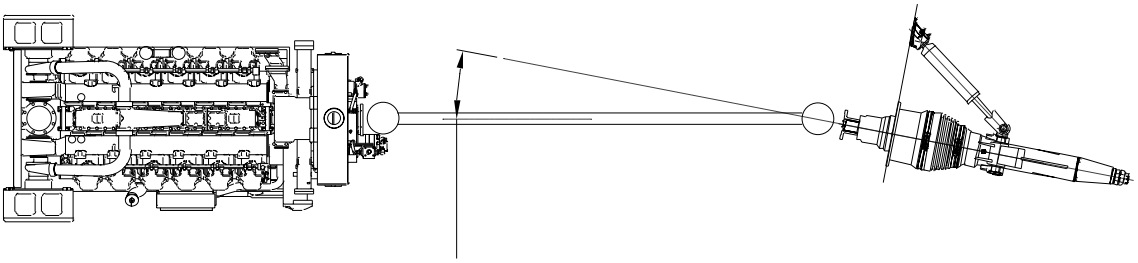

IMPROPER ALIGNMENT BETWEEN THE TRANSMISSION OUTPUT SHAFT AND SURFACE DRIVE INPUT SHAFT. NOTE THAT THE TRANSMISSION SHAFT AND SURFACE DRIVE SHAFT ARE NOT ON PARALLEL PLANES.

Figure 18. Examples of Proper and Improper Alignment

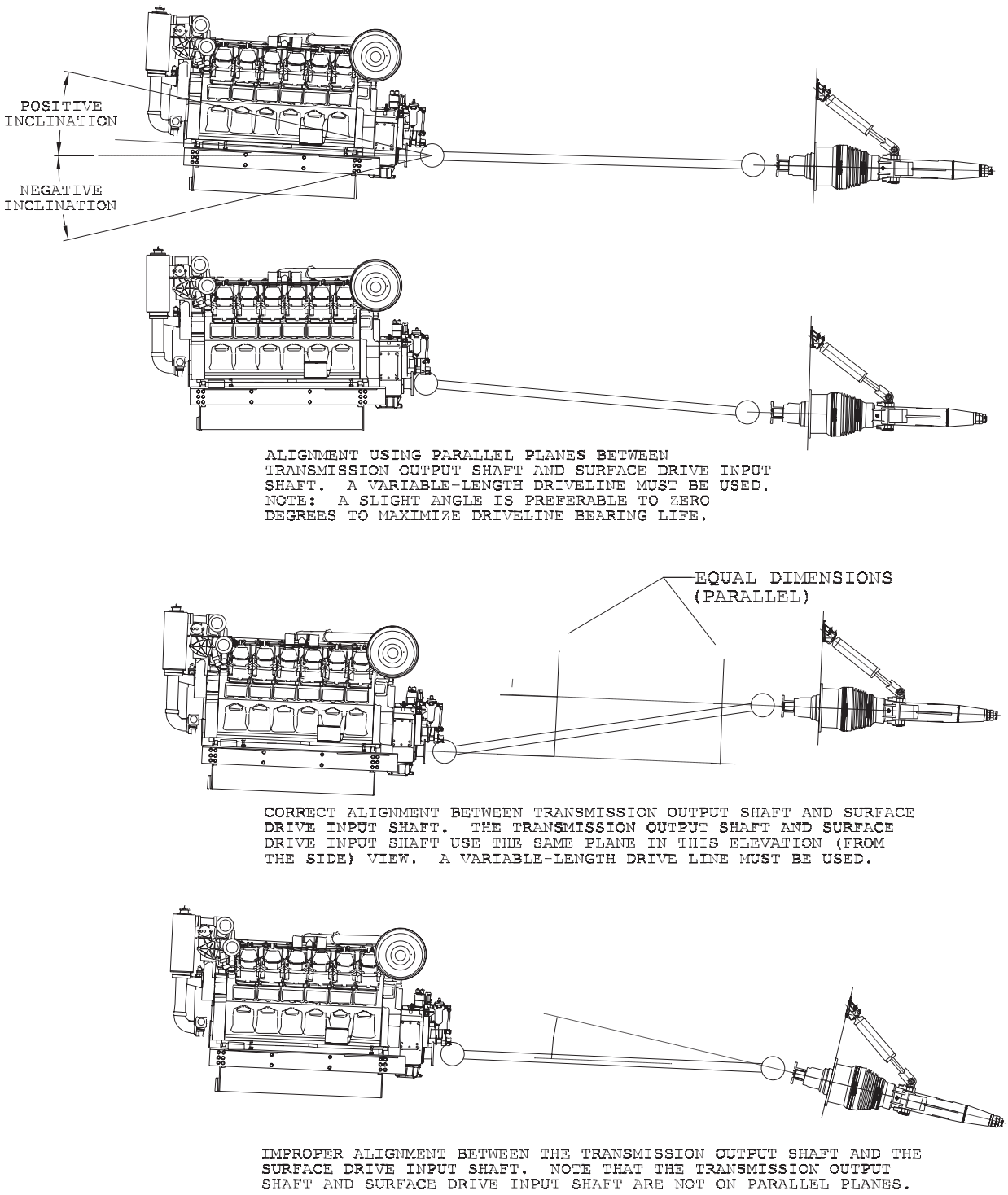

Figure 19. Examples of Proper and Improper Alignment

Lubrication

Arneson Surface Drives are supplied with an internal lubrication system that can be serviced inside the vessel. A non-pressurized type of lubrication system is standard equipment on an Arneson Surface Drive, and is described below.

Internal Lube Kit

The Internal Lube Kit supplied by Twin Disc, Incorporated for ASD16 drives is shown below. It includes an oil reservoir, hose, clamps, hose fittings and plugs. The customer provides the necessary support brackets for the reservoir. All components are to be internally clean to prevent oil contamination.

Reservoir Mounting

1. Mount reservoir 254 mm (10 in) or higher above surface drive centerline as shown. Support reservoir on bottom or under flange and secure to the vessel's structure. Connect 1/2 in. hose as shown.

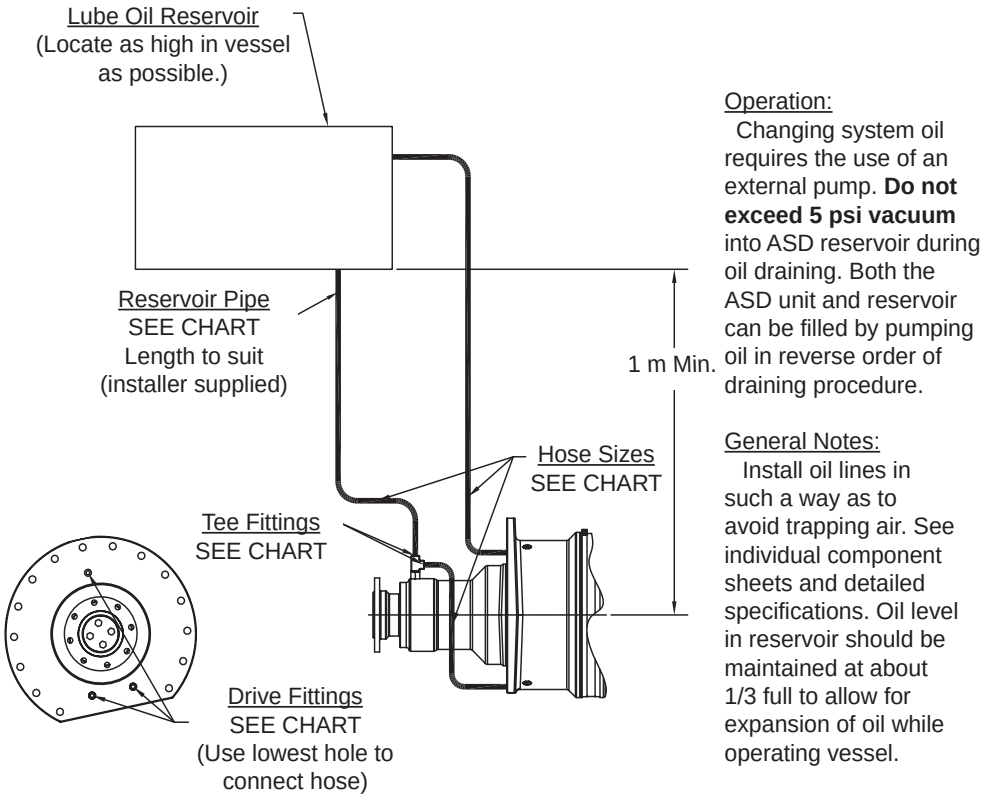

Figure 20. Lubrication System

To Fill the Unit

See the Drive Lubrication Features section for a listing of proper oils to be used for filling the drive and reservoir.

1. Trim the drive all the way down by extending the trim cylinder.

2. If the vessel is out of the water;

   A. Remove the plug on the top of the socket and the plug at the forward end on top of the thrust tube.

   B. Fill the drive as much as possible through the open thrust tube plug hole. Plug that hole.

   C. Continue filling as much as possible through the open socket plug hole. Plug that hole.

   D. Finish filling the drive through the top of the reservoir until the reservoir is one-third full.

   E. Replace all fill plugs and check fittings.

   F. Check this level after 24 hours and after the first vessel operation. If necessary, add more oil to the reservoir until it is again one-third full.

3. If the vessel is in the water;

   A. Fill through the top of the reservoir until the oil sustains a one-third full level in the reservoir.

   Note: Filling the drive will take longer when the vessel is in the water because the oil takes time to flow through bearings, etc. in the drive.

   B. Replace all fill plugs and check fittings.

   C. Check this level after 24 hours and after the first vessel operation. If necessary, add more oil to the reservoir until it is again one-third full.

4. During operation, the lube oil level will rise in the oil reservoir due to heat and the displacement of oil from within the drive unit into the reservoir. *This is normal.* The oil level will return to the original levels when the unit cools and is not running or idling.

To Drain the Unit

1. Trim the drive all the way up by retracting the trim cylinder.

2. If the vessel is out of the water, remove the drain plug at the bottom of the socket. Replace the drain plug after the oil has drained out.

3. If the vessel is in the water, drain the reservoir. Connect the hose at the bottom of the reservoir to a pump and pump the oil out of the unit. Reconnect the hose to the reservoir after pumping.

Propeller Installation

Note: See **Propeller Installation - New Applications** when installing a propeller for the first time. Also use that section if the propeller or propeller shaft are changed.

1. Apply a thin coat of anti-seize lubricating compound to the propeller shaft as shown below.

2. Install the propeller, spacer, propeller nut, lock nut, on the shaft as shown. Torque the propeller nut to 1220-1360 N-m (900-1000 ft.-lbs). Torque the jam (lock) nut to 1000 to 1150 N-m (700 to 800 ft.-lbs). Approach the lower value, then continue until a cotter pin slot in the nut aligns with the hole in the shaft. Install the cotter pin.

   Note: The propeller nut should be re-torqued following the following schedule.

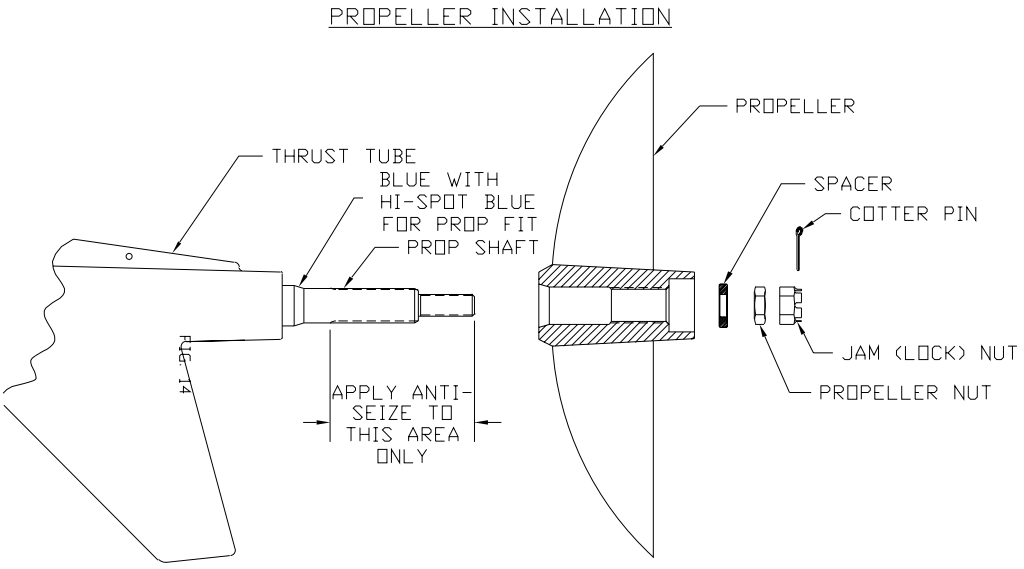

Figure 21. Propeller Installation

3. The propeller nut and lock nut must be checked for torque retention to the above values after initial use or within 10 hours of operation.

4. The propeller nut torque **MUST** be checked in the following operational interval

   A. The propeller nut torque must be checked in accordance with step 2 after an additional 250 hours of operation. If the torque is correct, go to step B. If the torque is incorrect, re-torque the nut and repeat step A.

   B. The propeller nut torque must be checked in accordance with step 2 after an additional 500 hours of operation. If the torque is correct, go to step C. If the torque is incorrect, re-torque the nut and repeat step B.

   C. The propeller nut torque must be checked in accordance with step 2 after an additional 1000 hours of operation. If the torque is correct, go to step D. If the torque is incorrect, re-torque the nut and repeat step C.

   D. The propeller nut torque must be checked in accordance with step 2 after an additional 1500 hours of operation. If the torque is correct, go to step E. If the torque is incorrect, re-torque the nut and repeat step D.

   E. Continue to increase the interval in increments of 1500 hours until the regular “haulout” interval of the vessel is reached.

   F. If at any point in steps A through F, the “haulout” interval of the vessel is reached or surpassed, the torque check interval may be established to be the same as the “haulout” interval. Record the final interval for reference.

Propeller Installation - New Applications

First time installation of new propellers will require a check to verify proper mating of the tapered shoulder on the propeller with the tapered shoulder on the shaft. Mismatched tapers may result in a damaged or broken propeller shaft and a lost propeller. Follow the procedure below to check the propeller to shaft fit:

1. Clean the taper on the forward end of the propeller hub and the tapered shoulder of the shaft with alcohol or other cleaner and wipe dry.

2. Apply a layout dye to the shaft taper as follows. Use a machinist's layout dye such as Dykem "Steel Layout Blue" Dykem part number DX100 marketed by ITW Dymon Company, 805 E. Old 56 Highway, Olathe, KS 66061 USA.

3. Apply the layout fluid to the shaft taper as thinly and evenly as possible over the entire tapered surface. The more evenly the dye is applied, the more accurate will be the reading. Allow the dye to dry completely before proceeding.

4. Slide the propeller onto the shaft until the male and female tapers touch. Install the propeller nut and torque the nut to 200 N-m (150 ft-lbs). Verify that the propeller is securely seated on the shaft taper.

5. Remove the propeller nut, and slide the propeller away from the shaft, being careful not to disturb the layout dye on the shaft and on the propeller hub internal (female) taper.

6. Evaluate the contact pattern on both tapers. See **Figure 22** for guidance on acceptable contact patterns. The surfaces should match approximately 80% of the total tapered area.

   Note: It is important that the contact should be biased toward the larger diameter end of both tapers. If contact is predominant at the small end, the shaft may be overstressed locally and may fail. Contact Twin Disc if the taper contact pattern is not in accordance with **Figure 23**.

7. Once the contact is confirmed to be acceptable, clean the dye from the tapers with the above solvent and reinstall the propeller as outlined in the previous section.

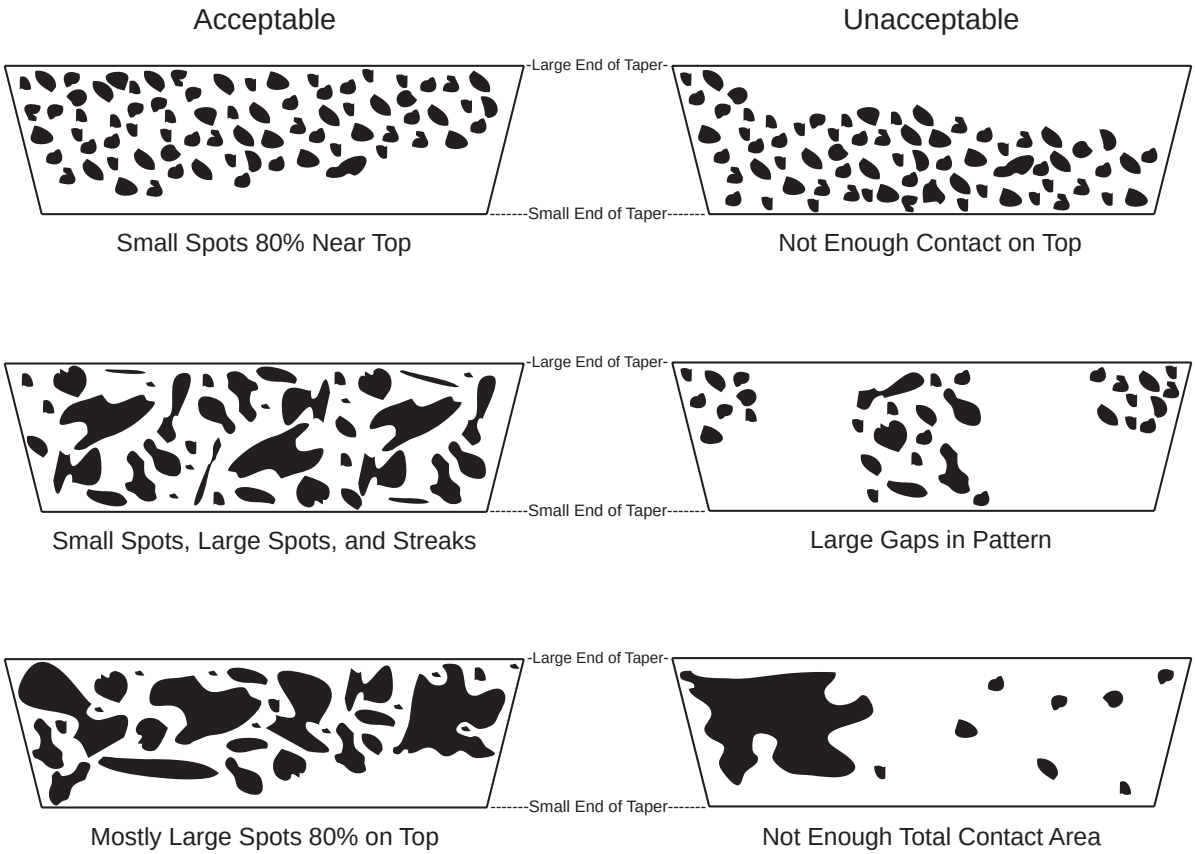

Figure 22. Dye Contact Pattern Samples

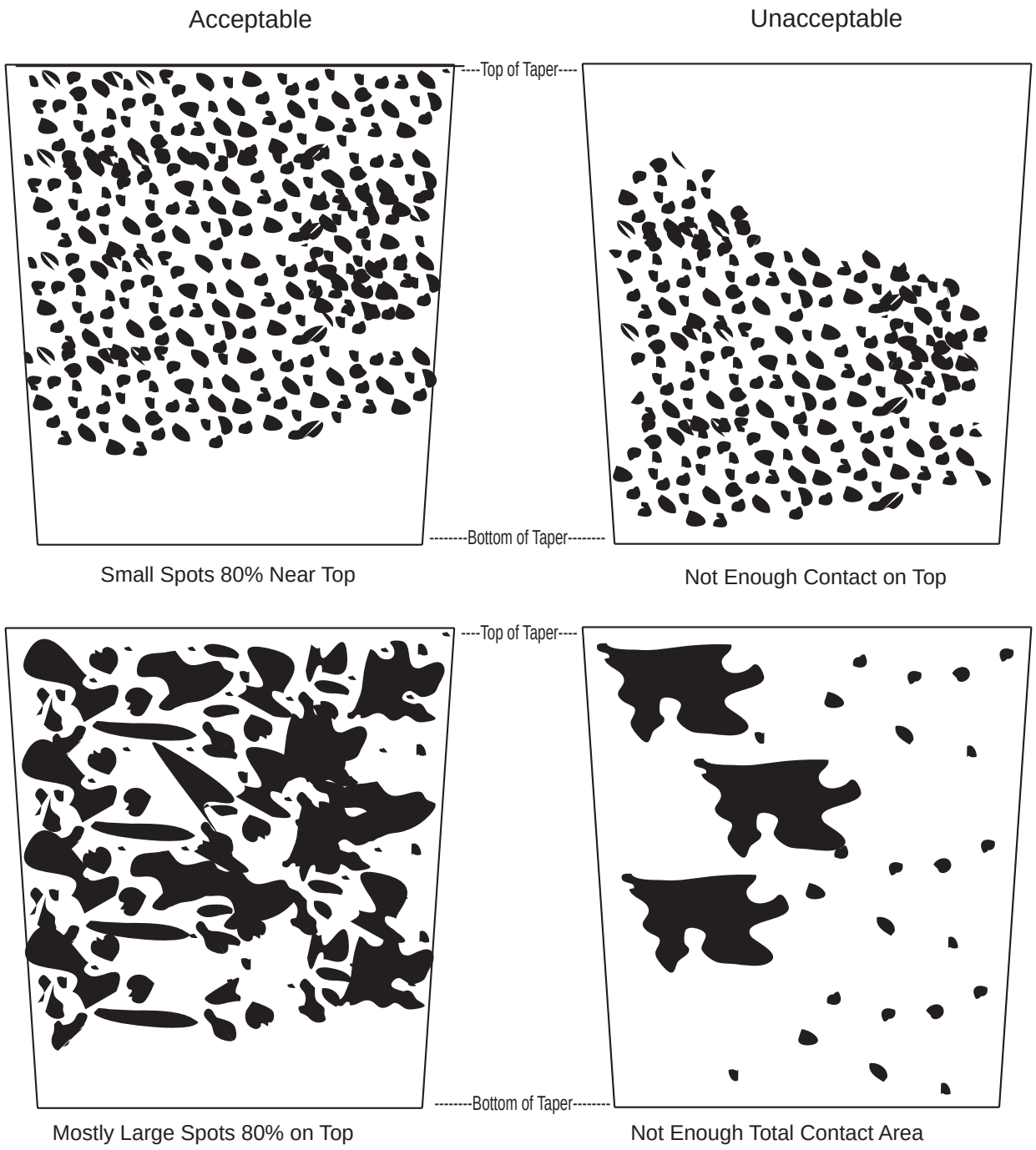

Figure 23. Dye Contact Pattern Samples (Long Shallow Taper)

Corrosion Protection

⚠ WARNING

If the vessel has a carbon fiber hull or other carbon fiber structure, ask your Twin Disc distributor to contact the factory for assistance.

⚠ WARNING

Each Corrosion Protection component below is important and must be maintained. A failure in any one of these components can cause and/or allow the drives and other metals to corrode.

⚠ WARNING

ASD15, ASD16, and ASD18 Arneson Surface Drives have aluminum housings. Aluminum components offer significant weight savings, but can corrode quickly in seawater. Therefore, they require additional attention when in seawater. If unfamiliar with Corrosion Protection of metal components in seawater, please contact your Twin Disc distributor for assistance.

Note: The procedures below were developed from Twin Disc experience and ABYC's E-2, E-11, and A-28 Standards (American Boat and Yacht Council - www.abyc.com).

Anodes & Bonding Wires

⚠ WARNING

All anodes on a vessel with Arneson Surface Drives should be made of aluminum per MIL-A-24779 (SM). Zinc anodes should not be used and can cause premature corrosion of drive components. The only exception is if the zinc anode is electrically isolated from the Arneson Surface Drives (> 25000 Ohms resistance per ABYC's E-11 Standard - AC & DC Electrical Systems on Boats).

⚠ WARNING

Do NOT cover anodes with anything (paint, anti-fouling, tape, stickers, marine growth, etc.). Having any portion of the anode surface covered reduces its effectiveness and can cause premature corrosion of drive components.

1. Twin Disc aluminum anode kit must be installed. It includes aluminum anodes, bonding wires, and mounting hardware. Install transom anodes below the waterline and as close to the drive as possible to maximize their effectiveness. Before installation, clean any dirty hardware, connectors, etc., with a Scotch-Brite™ pad or stainless steel wire brush to ensure good electrical connections.

   Note: Zinc anodes were commonly used in the past. Many manufacturers, including Twin Disc, have converted their anodes to aluminum because aluminum anodes offer better protection. Aluminum anodes per MIL-A-24779 (SM) are designed so they will corrode before the aluminum casting alloy.

2. If there are holes aft of the fin on the fin mounting pad, a Twin Disc fin anode(s) MUST be installed.

⚠ WARNING

Failure to install a fin anode on a drive with these two holes can cause premature corrosion of drive components.

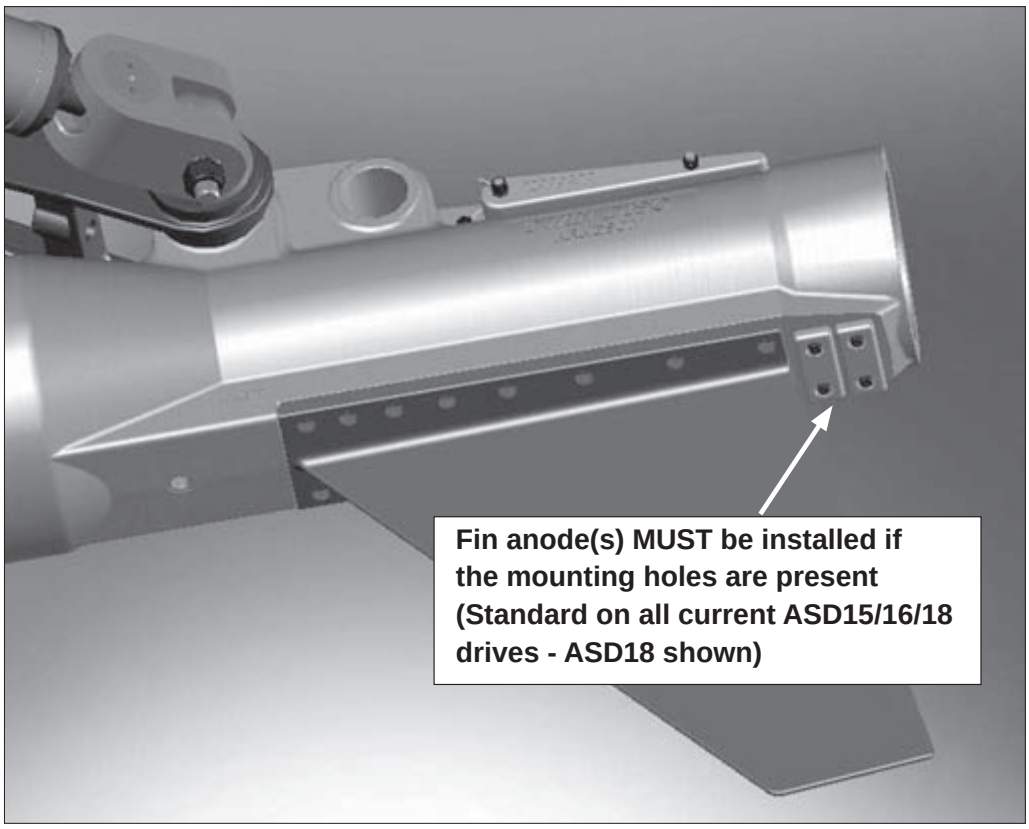

Figure 24. Fin Anodes

3. Replace anodes when they have deteriorated to 1/2 of their original size. When replacing anodes, clean hardware that is going to be re-used with a Scotch-Brite™ pad or stainless steel wire brush.

4. In addition to the bonding wires included in the kit, customer supplied bonding wire(s) should connect all drives together at the bonding wire junction on the drive backing plate inside the engine room. A twin screw vessel requires one bonding wire to connect the two drives, a triple screw vessel requires two bonding wires to connect the three drives, etc.

5. One customer supplied bonding wire connection must be made from one drive backing plate to engine negative / battery negative at the main bonding bus (engine negative and battery negatives MUST ALWAYS be connected together). The only exception is if the drives are too be isolated from all other equipment. If the drives are to be isolated from other equipment, ask your Twin Disc distributor to contact the factory for assistance.

6. In addition to the Arneson Drives, all underwater metals outside of vessel and those inside the vessel that can come in contact with bilge water, fuel lines, or standing water (i.e. - stern thruster, swim platform, keel cooler, sea water strainer, thru-hull fittings, etc.) should be bonded to the main bonding bus. There are exceptions where some components should be isolated. See ABYC's E-11 Standard - AC & DC Electrical Systems on Boats for more information on bonding and isolation. Per this standard isolation is defined as more than 25000 Ohms resistance between the two metals.

⚠ WARNING

Each Twin Disc anode kit is designed to protect one Arneson Surface Drive. Additional underwater metals bonded to the drive require installation of additional anodes which may be purchased from your local Twin Disc distributor. Failure to install additional aluminum anodes can cause premature corrosion of drive components. Installing more aluminum anodes than is necessary is safer than too few.

7. If the hull is a metal hull, see ABYC standards E-2 - Cathodic Protection and E-11 - AC & DC Electrical Systems on Boats for additional requirements.

8. To test if metals are bonded (electrically connected) to each other, use a multi-meter and measure the resistance between bare metal surfaces on each. Properly bonded components have less than 0.5 Ohms resistance between them.

   Note: Check the resistance of the multi-meter wires before taking any measurements by touching them together and subtracting that resistance from all future resistance measurements.

9. See ABYC's E-11 standard for a full list of components that should be attached to the bonding system.

   Note: When bonding components together, use as few connections as possible and try to connect them in parallel to one common point. Avoid connections in series and do NOT have more than one connection from any component to the common bonding point. This prevents electrical loops.

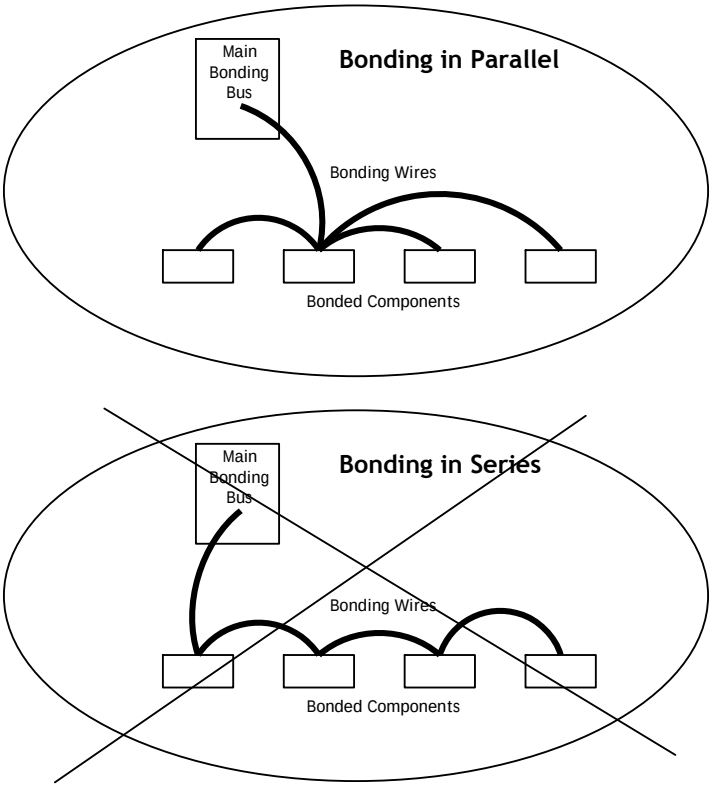

Figure 25. Bonding in Parallel

Isolation

1. When using shore power, a galvanic isolator or isolation transformer is required to isolate the vessel from the marina and other vessels in the marina. It is preferential to have a galvanic isolator even if the vessel has an isolation transformer. When using both items, install the isolation transformer as a polarization transformer. See ABYC's E-11 Standard - AC and DC Electrical Systems on Boats for more information on transformers, including installation details. See ABYC's A-28 Standard - Galvanic Isolators for more details. Galvanic isolators may be purchased from your local Twin Disc distributor.

⚠ WARNING

If no electrical isolation is present, the anodes will protect the marina and other un-isolated vessels in the marina because they are connected together. Also, without isolation, all underwater metals are much more susceptible to stray current corrosion. Both issues can result in the anodes corroding extremely rapidly and cause premature corrosion of drive components. In the worst cases the anodes can be severely corroded in a few days or even hours.

2. It is highly recommended that the galvanic isolator pass the ABYC A-28 Galvanic Isolator Standard - Fail Safe Test Criteria.

Coating and Anti-Fouling

1. Aluminum components are coated with a durable epoxy coating. This coating is a barrier between the aluminum and seawater. This coating will inevitably be scratched from shipping, installation, and vessel operation. These scratches need to be repaired as soon as possible. To repair the coating, follow the procedure below.

⚠ WARNING

Failure to repair scratches in the epoxy coating on aluminum components (thrust tube, socket, and fin) per the below procedure can cause premature corrosion of drive components. Cleaning and re-coating quickly after cleaning are extremely important for coating adhesion. Applying a coating on dirty surfaces is the most common reason for coating failure.

Note: Anti-foulings are porous and therefore not acceptable as a substitute for the epoxy barrier coating. Anti-foulings are to be applied on top of the epoxy coating.

2. Anti-Fouling - It is recommended that a suitable anti-fouling paint be applied to minimize marine growth. The anti-fouling used must be marked as acceptable for use with aluminum.

   Care must be taken to keep anti-fouling away from pivoting joints, cylinder rods, output shaft, anodes, bonding wires and anywhere else the anti-fouling could interfere with the proper operation of the drive.

⚠ CAUTION

Do not use anti-fouling with any form of copper. Copper will cause the aluminum drive housings to corrode.

Twin Disc Re-Coating and Anti-Fouling Application Procedure for Aluminum Arneson Surface Drives

1. First clean all exposed areas of socket, thrust tube, and fin with Chlor-Rid® (www.Chlor-Rid.com). Note that seals must not be contacted by a high pressure spray and need to be protected.

2. Soda Blast (Sodium Bicarbonate) the exposed metal surfaces to be re-coated. Soda blast neighboring intact coating within 13 mm (1/2 in) of the bare metal spots. If done correctly, all chipped paint and corrosion residue/contaminants will be removed. This also prepares the neighboring intact coating for re-coating.

   If re-coating the entire drive, careful use of a wet abrasive blast, followed by a soda blast, is acceptable provided critical components of the drives are protected from the blast - cylinder rods, propeller shafts, cylinder bracket pivot balls, boots, and drive thrust balls. Seals must not be contacted by any blast or high pressure spray. When using a wet abrasive blast, Chlor-Rid® should be added to the solution.

3. Clean the drives again with Chlor-Rid® as in Step 1 and let the affected areas dry sufficiently.

4. If there are corroded and pitted areas where a noticeable amount of metal is missing, fill in the corroded and pitted areas with a Belzona® filler paste (www.Belzona.com) as needed to re-establish the original shape of the drive. If Belzona is not needed, go to Step 7. Recommended Belzona® products are 1111 and 1121. Both can be machined if necessary. 1111 has a 15 minute cure time and 1121 has a 45 minute cure time.

5. After the Belzona® has cured, scour it with course or diamond-grit sandpaper.

6. Clean the drives again with Chlor-Rid® as in Step 1 and let the affected areas dry sufficiently.

7. Apply an epoxy coating to the bare metal and Belzona® areas as soon as possible after the drive is dry. Coatings will have the best adhesion when applied as soon as the Chlor-Rid® has dried. Repeat Step 6 if it has been more than 24 hours since the drive was cleaned. When coating, overlap the neighboring intact coating by at least 13 mm (1/2 in). When applying a coating, follow the coating manufacturer's instructions. Coatings other than Ceram-Kote 54® and 99M may require a primer coating on the surface before the epoxy coating. If so, clean with Chlor-Rid® before and after the primer is applied. Again, apply the primer and coating as soon as the Chlor-Rid® has dried.

   Note: Anti-foulings are not acceptable as a substitute for the epoxy barrier coating because they are porous. Anti-foulings are to be applied on top of the epoxy coating.

   Note: Twin Disc recommends coating with Ceram-Kote 54® or 99M (www.Ceram-Kote.com). 54® is supplied on the drives. 99M may be easier to obtain and apply in the field. One benefit of these coatings is that they are applied directly to the bare metal surface and do not require a primer. These coatings may not be readily available, so a substitute is acceptable. If using a substitute, confirm it has good adhesion, abrasion resistance, impact resistance, and dielectric resistance (corrosion resistance). For guidance, compare the values with those of Ceram-Kote 54® and 99M (see data sheets on www.Ceram-Kote.com).

8. After the epoxy has cured, clean the entire drive with Chlor-Rid® as in Step 1 and let dry sufficiently.

9. Apply anti-fouling to the drive according to the anti-fouling manufacturer's instructions as soon as possible after the drive is dry. Repeat Step 8 if it has been more than 24 hours since the drive was cleaned. Anti-foulings should be marked as safe for use with aluminum components. Do NOT use anti-foulings that contain copper with aluminum drives (ASD 15, ASD16, ASD 18). Do NOT put anti-fouling on pivoting joints, cylinder rods, output shaft, anodes, bonding wires, or anything else that could interfere with proper operation of the drives.

   Note: There are several cleaning steps. These are very important. They ensure that contaminants do not cause premature coating failure. All coatings (primer, epoxy, and anti-fouling) should be applied as soon as the areas are dried. No coating should be applied more than 24 hours after cleaning. Dirty surfaces are the top reason for coating failure.

Hull Monitoring and Impressed Current Systems

1. Measuring Hull Potential is a very good way to check the corrosion "health" of the vessel. The hull potential for vessels with aluminum Arneson Drives (ASD15/16/18) needs to be between -950 and -1100 mV as compared with an Silver/Silver-Chloride (Ag/AgCl) Reference Cell. This should be measured by a certified corrosion technician. When the hull potential is outside of this range, the aluminum drives can corrode.

   Note: As anodes corrode, the hull potential will increase (i.e. -900 mV, -850mV, etc). Other factors that affect hull potential include water temperature, water speed, stray current, isolation, etc.

2. Hull monitors and impressed current systems are helpful tools that can observe the hull potential. Impressed current systems also "adjust" the hull potential.

3. Hull monitors show the hull potential and generally have green, yellow, and red areas to report if it is good, ok, or bad - respectively.

4. Impressed Current Systems not only monitor the hull potential, but also (in simple terms) send an electrical current in an opposite direction to corrosion-causing currents to move the hull potential into recommended mV range. This prevents the corrosion of the drives and removes much of the load on the Twin Disc anodes, causing them to last much longer.

⚠ WARNING

Twin Disc anodes are ALWAYS required to be installed, regardless of any other corrosion protection systems on the vessel including impressed current systems.

Operation

General

The following information is intended for use by the vessel operator. It will help the operator understand the operation of the model ASD16 Arneson Surface Drive, and applies to the drive only. The vessel's operator manual must be referred to for procedures applicable to other vessel functions, and for the operation of the control system for this drive.

The ASD16 Arneson Surface Drive provides positive steering and a means for adjusting the depth of the surface piercing propeller while under way.

Prior to Daily Use

1. Verify that the Arneson Surface Drive has adequate lubrication.

   The lube oil reservoir must not be filled more than 1/3 full when cold with the drive stopped. The level will rise during operation due to temperature increase and rotation of internal parts.

2. Verify that the steering/trim reservoir(s) is/are properly filled.

Surface Drive Operation

For optimum performance, the ASD16 Arneson Surface Drive units should be trimmed so that the center of the propeller hub is at the waterline under operating conditions. Under-way adjustments may be required when the vessel trim changes due to fuel consumption, loading, etc.

The ASD16 Arneson Surface Drive should not be trimmed up to such a degree that the engine is allowed to operate higher than the maximum speed recommended by the engine manufacturer.

⚠ CAUTION

A change in trim while underway may cause a change in steering direction.

Transmission forward/reverse shifting should be accomplished at engine idling speed to avoid unnecessary impact loads that could damage the Arneson Surface Drive system.

Preventative Maintenance

General Maintenance

There are two hydraulic systems on Arneson Surface Drives: 1) Arneson Surface Drives oil, and 2) the steering/trim hydraulic system. Both need proper maintenance. Arneson Surface Drive oil is contained in a closed system that is comprised of a reservoir that is connected to the front of the drive. Oil fills the area inside the drive and surrounds the propeller shaft, the input shaft, and the constant velocity universal joint that connects the two shafts. The steering/trim hydraulic system is a self contained system. It is used to operate the trim cylinder and the steering cylinders of the surface drive.

Lubrication

Arneson Surface Drive and Steering/Trim hydraulic fluids should be checked daily.

Arneson Surface Drive Oil

The reservoir should be approximately 1/3 full when cold with the drive stopped, to allow for expansion from heat and agitation during operation.

A milky appearance is usually an indication that water has been ingested. Do not operate the drive for extended periods with contaminated oil.

Periodic oil sample analysis can be helpful in identifying the presence of water or other contaminants that could indicate impending failure.

When the vessel is waterborne, drain the lubrication oil by removing the lower hose that is attached to the drive inside the vessel. Drain and vent ports are provided on the drive to assist draining when the vessel is dry-docked.

See the Maintenance Checklist table in this section for the recommended oil change intervals.

Steering and Trim Hydraulic Oil System

Note: Some steering/trim hydraulic systems include separate reservoirs for steering and trim fluids. Some systems include a common reservoir for steering and trim fluids. Be sure all systems are properly maintained.

Oil Level

The oil level should be checked daily or every 10 hours of operation.

Oil and Filter Change Interval

The oil filter (if equipped) in the Steering/Trim Hydraulic System(s) should be changed whenever the engine filters are changed, and when the oil is changed.

The oil should be changed if contaminated. An oil analysis can be helpful in avoiding problems from continued operation with contaminated oil.

Type Oil Recommended

See Description and Specifications.

Corrosion Protection System Maintenance

Anodes

Check the anodes daily for the first two weeks a vessel is put into water. At minimum, check them weekly after that. When the vessel is moved to a new dock, marina, etc., check the anodes daily for two weeks and then weekly after that. Replace anodes when they are 1/2 of their original size. When replacing anodes, clean any dirty hardware, connectors, etc., with a Scotch-Brite™ pad or stainless steel wire brush to ensure good electrical connections.

Rapid deterioration of anodes is not normal and indicates something is wrong. If this happens, check the following:

1. Is a galvanic isolator and/or transformer installed? Test if they are isolating the vessel from the marina.

2. Are there any other electrical cables connecting the vessel to the dock? If so, make sure there is isolation between the vessel and the marina on the ground wire or disconnect it.

3. Are the bonding wires installed properly and in good condition? If not, replace them.

   If rapid corrosion continues move to another dock or marina far away from that dock and contact a certified corrosion technician. You may also contact your local Twin Disc distributor and ask them to contact the factory for assistance if necessary.

⚠ WARNING

If anodes are corroding rapidly, it is possible the corrosion situation severe enough that the drives will be corroding rapidly as well. Do NOT delay in finding a solution to the issue. In extreme conditions, the drives can corrode completely through in a few days or hours.

Bonding

Check the bonding wires are intact once a month. Replace if necessary.

When the vessel is out of the water, check that all bonded components have no more than 0.5 Ohms resistance with each other. If the resistance is higher, replace the bonding wires and clean any dirty hardware, connectors, etc., with a Scotch-Brite™ pad or stainless steel wire brush to ensure good electrical connections.

Isolation

Check that any galvanic isolator and transformer (isolation or polarization) are working properly every month.

Check the hull potential weekly if possible. Also check every time the vessel moves to a new dock, even if it is in the same marina or if the vessel has moored there previously.

Coating

Check the coating before putting the vessel in the water. Repair any cuts, holidays, etc., in the epoxy coating on the aluminum components (socket, thrust tube, and fin) per the Coating Procedure.

Also check the coating after any impact and if the anodes are deteriorating rapidly, missing, or less than 1/2 their original size. Repair as needed.

Overhaul Interval

A complete overhaul of the unit should be made at the same time that the engine is overhauled.

Periodic Visual Inspection

1. Check the propeller for signs of damage daily. Repair or replace as necessary.

2. Check the Cathodic Protection System at least every month. Replace anodes when 50% consumed or if excessive corrosion is seen. Check all bonding wires and fittings. Replace if required.

3. Inspect the oil lines for leaky connections, cracks, or other damage. Replace damaged lines.

4. Periodically, inspect the drive line and the input and output shaft oil seals for leakage. Replace parts as required.

Table 2. Maintenance Checklist

Location and Action	Beginning each day of operation	After first 200 hours of operation	First 500 hours of operation, but not to exceed a 12 month period	2000 hours
Arneson Surface Drive				
Oil: Check visually	X			
Oil change interval: As indicated by analysis		X	X	X
Entire System: Check for leakage	X			
Power Steering/Power Trim Hydraulic System				
Reservoir fluid level: Check visually	X			
Oil filter: Replacement			X	
Entire System: Check for leakage	X			
Hydraulic system: Perform manual and emergency operation		X	X	X
Hydraulic system: Cycle lock to lock	X			
Propeller				
Check for damage	X			
Propeller nut				
Torque check	See Propeller Torque Schedule on next page			
Socket, trim cylinder, steering cylinder				
Check transom fasteners			X	X
Thrust Ball retaining ring				
Check that it is tight			X	X

Propeller Torque Maintenance

Note: The propeller nut should be re-torqued according to the following schedule.

Torque the propeller nut to 1360 N-m (1000 ft-lbs). Torque the jam (lock) nut to 950 - 1085 N-m (700 - 800 ft-lbs). Approach the lower value, then continue until a cotter pin slot in the nut aligns with the hole in the shaft. Install the cotter pin.

1. The propeller nut and lock nut must be checked for torque retention to the above values after initial use or within 10 hours of operation.

2. The propeller nut torque **MUST** be checked in the following operational interval

   A. The propeller nut torque must be checked in accordance with the required torque after an additional 250 hours of operation. If the torque is correct, go to step B. If the torque is incorrect, re-torque the nut and repeat step A.

   B. The propeller nut torque must be checked in accordance with the required torque after an additional 500 hours of operation. If the torque is correct, go to step C. If the torque is incorrect, re-torque the nut and repeat step B.

   C. The propeller nut torque must be checked in accordance with the required torque after an additional 1000 hours of operation. If the torque is correct, go to step D. If the torque is incorrect, re-torque the nut and repeat step C.

   D. The propeller nut torque must be checked in accordance with the required torque after an additional 1500 hours of operation. If the torque is correct, go to step E. If the torque is incorrect, re-torque the nut and repeat step D.

   E. Continue to increase the interval in increments of 1500 hours until the regular “haulout” interval of the vessel is reached.

   F. If at any point in steps A through F, the “haulout” interval of the vessel is reached or surpassed, the torque check interval may be established to be the same as the “haulout” interval. Record the final interval for reference.

Troubleshooting

Troubleshooting Chart

The following chart is intended as a guide for determining the cause of problems that could be encountered and the corrective actions for those difficulties.

The Arneson Surface Drive is one part of a complete power package. Problems in the input power system (engine) or the output power delivery components (transmission and driveline) can cause problems that may be erroneously interpreted as being Arneson Surface Drive related. It is important that the entire power package and control systems be considered when problems are encountered.

The Troubleshooting Chart is shown on the following page.

Table 3. Troubleshooting Chart

Problem	Probable Cause	Remedy
Propeller does not turn	Transmission malfunction	Repair or replace
	Broken transmission coupling	Repair or replace
	Broken drive coupling	Repair or replace
	Broken internal unit	Repair or replace
Trim / steering function failure	Low hydraulic oil	Check for leak. Repair or service system
	Pump belt broken	Replace
	Leak in hydraulic line	Replace
	Leak in cylinder	Repair
	Trim control switch failure	Replace
	Hydraulic pump failure	Repair or replace
	Steering helm malfunction	Repair or replace
Excesssive drive noise or vibration	Misaligned inboard driveline	Align and check phasing of u-joints**
	Propeller damaged	Repair or replace
	Low drive oil level	Check for leak. Repair or service the system.
	Failed bearing or U-joint	Remove drive and repair
	Air in trim cylinders	Bleed Power Steering/Trim hydraulic system.
Water in drive oil (The oil looks milky and brown.)	Leak in thrust ball/socket seal	Tighten aft threaded retainer ring. Remove and replace packing and o-ring.
	Leak in thrust tube aft oil seal	Remove and replace aft oil seals and o-rings. Repair or replace shaft sleeve if damaged.
	Loose oil fill and/or drain	Tighten or remove and replace the plug.
Anodes are significantly corroded after a short period of time in the water	Electrical fault on vessel	Repair electrical fault, check bonding system, and replace anodes.
	Stray current from marina or another vessel	Install galvanic isolator and/or check that it is working. If problem continues, investigate installing a polarization transformer.
	Not enough anodes	Install additional anodes.
	Too much uncoated, more noble metals	Coat the more noble metals, i.e. - stainless steels, brasses, bronzes, etc.
Anodes are not corroding or corroding extremely slowly	No problem	No remedy needed.
	Anodes not connected to bonding system	Ensure that the anodes have less than 1.0 Ohm resistance with all metals they are protecting.
	Poor quality anodes	Use anodes made per the proper MIL specification.
	Anodes are covered with paint, tape, etc.	Remove any coatings on the anodes surfaces.
** See the Driveline alignment in the Installation Section		

Removal from Vessel

Prior to Removal

Removal and disassembly should not begin until the drive unit exterior and work area have been thoroughly cleaned.

Figures of special tools are located in **Special Tools Section** of this manual. References will be made when a special tool is required.

As parts are disassembled, inspect for damage, wear and burrs. See the **Cleaning and Inspection** section of this manual for details.

Note: There are two methods to service an Arneson Surface Drive:

1. The first method as described below explains the removal of the thrust tube assembly, while keeping the thrust socket mounted to the transom. This method is used when service is not required on the thrust socket sub assembly.

2. The second method that follows covers the removal of the ASD16 unit from the transom followed by the disassembly of the thrust tube from the thrust socket.

Removal of Thrust Tube While Thrust Socket Remains Mounted to Transom

⚠ WARNING

Always disconnect the battery cables and remove the key from the ignition before beginning this procedure.

⚠ CAUTION

Support the thrust tube with a block and tackle, forklift or other system capable of carrying the weight of the thrust tube. Do not allow the thrust tube to angle down to the point where the ball/thrust tube assembly makes contact against the thrust socket. Severe damage to the ball and the socket could result.

1. Disconnect the battery cables and remove the key from the ignition.

2. Support the drive with a block and tackle, forklift or other system capable of carrying the weight of the entire drive. Do not allow the thrust tube to angle down to the point where the ball/thrust tube assembly makes contact against the thrust socket.

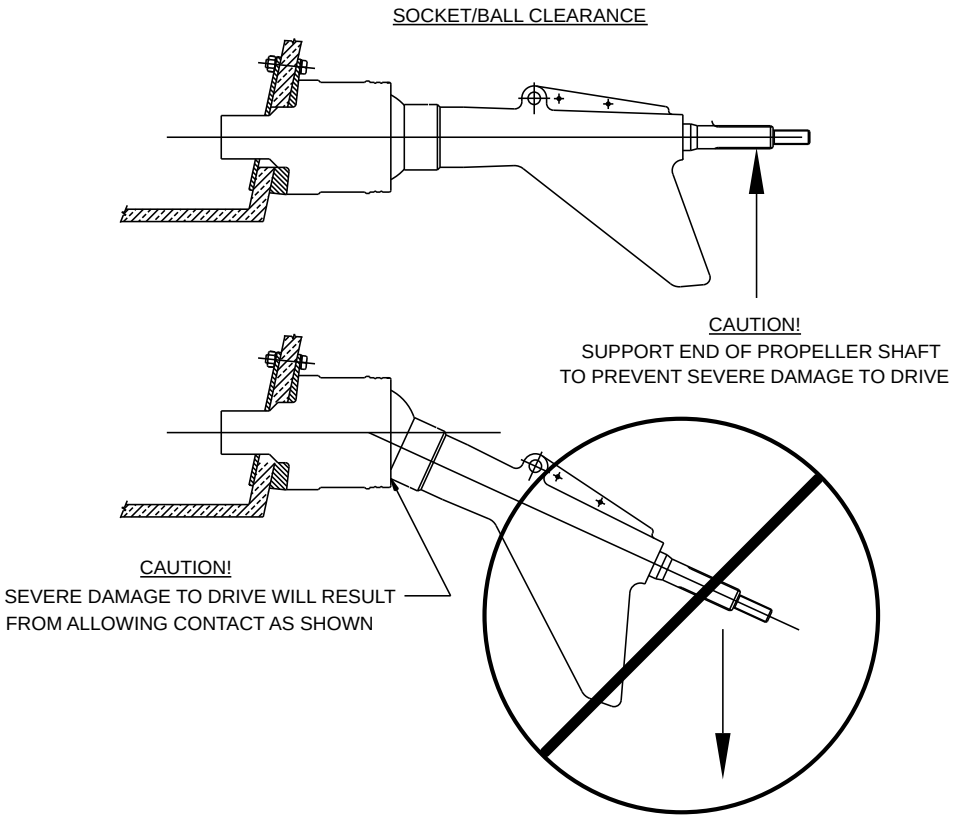

Figure 26. Protect Ball from Damage

3. **All drives except 1020763 and 1021360:** Remove the cotter pin and jam nut. Loosen the propeller nut until it is flush with the end of the shaft to prevent damage when the propeller moves from the tapered pilot. Remove the propeller from the splined shaft using suitable pullers, soft blocks and mallets as necessary, allowing the propeller to stop against the spacer and propeller nut. Remove the propeller nut, spacer, and propeller from the rear end of the propeller shaft.

   Assemblies 1020763 and 1021360: The propellers on these drives are mounted on a longer, shallow-slope shaft taper (1:10 slope) in addition to the spline. They are equipped with “backing” shims between the mechanical seal retaining ring and the propeller hub (A rope guard, bolted to the forward face of the propeller hub, covers this area).

   If the original propeller and shaft are to be re-installed together, the same backing-shim group may be re-used. Otherwise, perform the shim selection procedure described in the propeller mounting section of this manual.

Protect the exposed part of the mechanical seal while the propeller is absent. The aft shipping cover 1021042 is available separately to provide this protection.

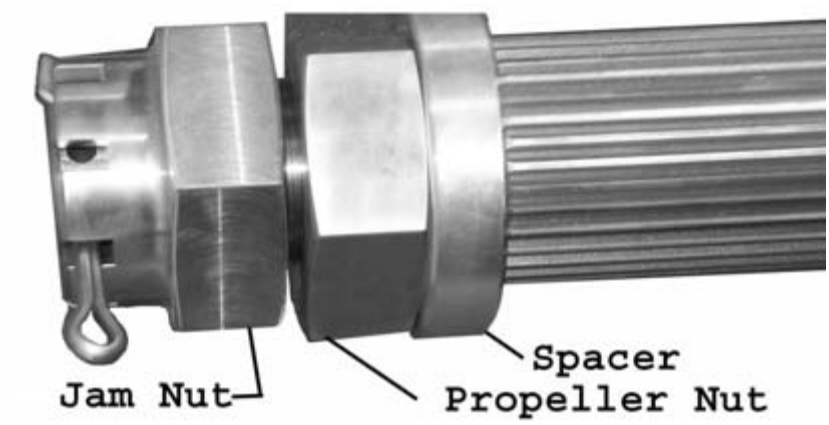

Figure 27. Propeller Retaining Parts

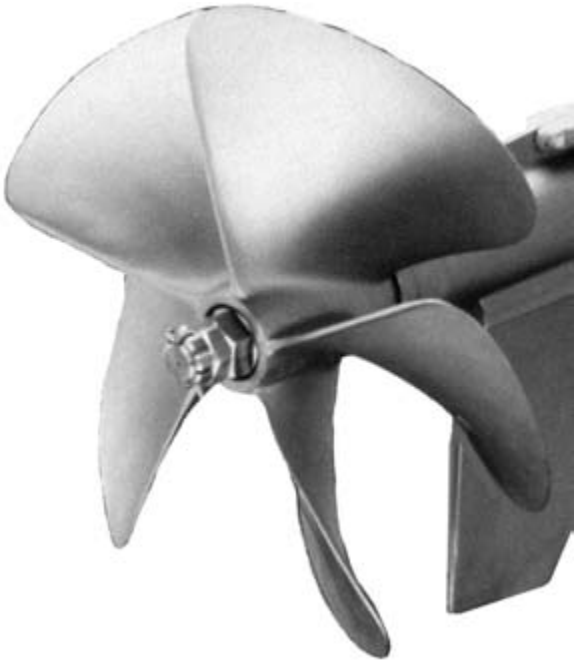

Figure 28. Propeller Installed

4. Drain the oil from the unit through the drain holes in the housings or from the lower oil reservoir hose inside the boat.

5. Disconnect the steering cylinder from the trim cylinder yoke pin. Disconnect the tie bar from the tie bar pin. Remove the trim cylinder yoke pin and the tie bar pin.

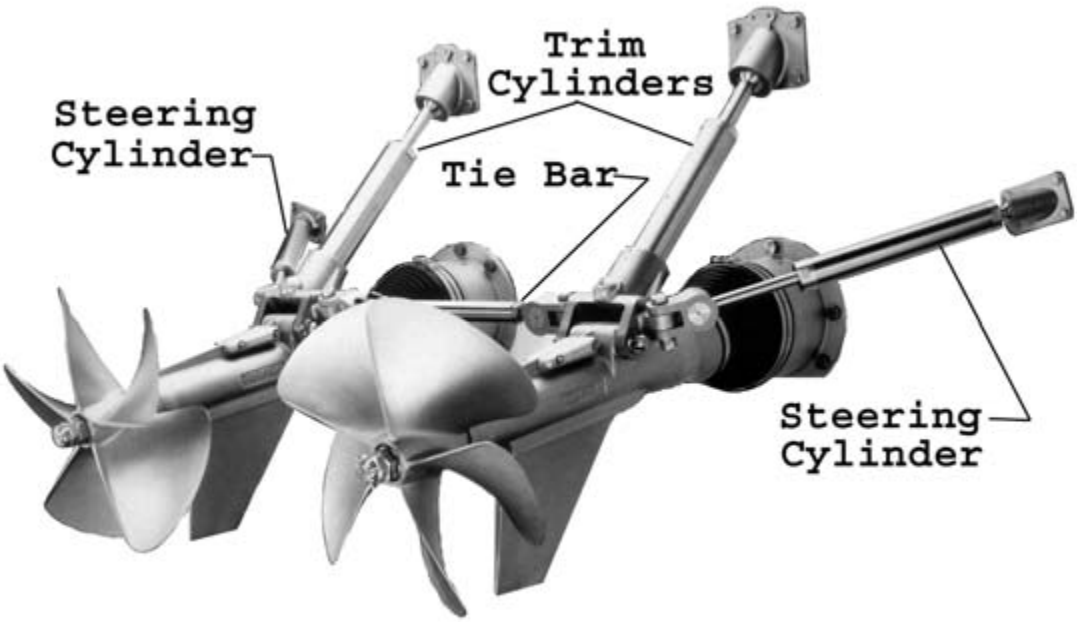

Figure 29. Rear View of Dual Installation Showing Cylinders and Tie Bar

6. Remove the circle clamps on the boot and push the boot back over the thrust tube. Consider placing a container under the thrust socket to catch the normal oil spillage as the unit comes apart.

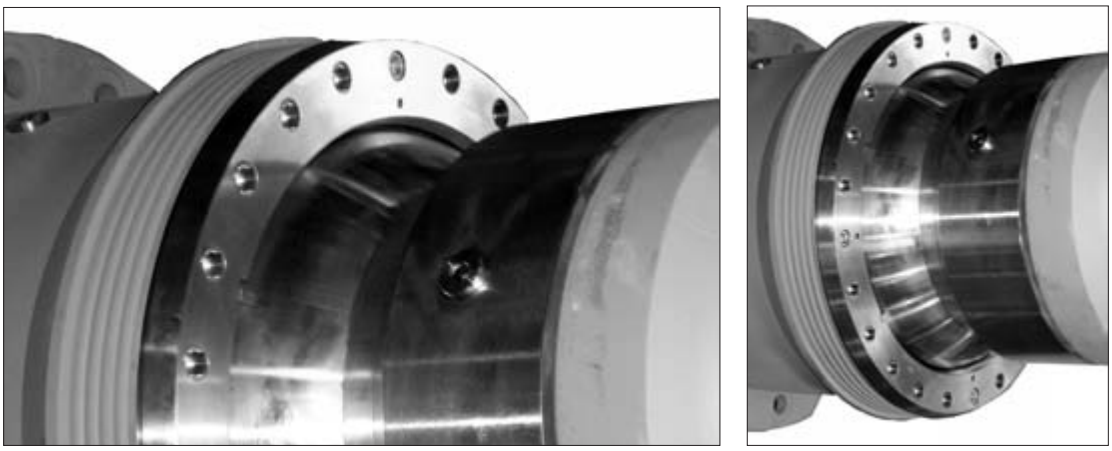

Figure 30. Remove All Clamps and Slide Boot Back Over Thrust Tube

7. Remove the retainer (wear sleeve) cover bolts.

8. Remove the retainer (wear sleeve) cover, shims and rear ball retainer.

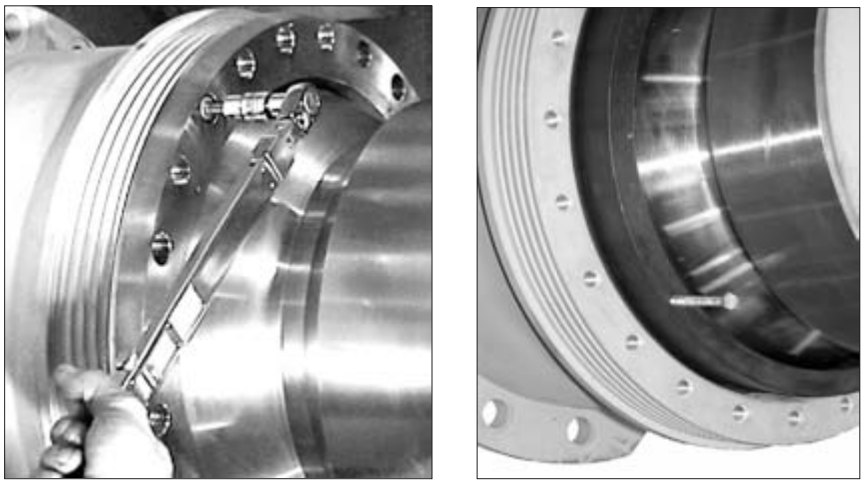

Figure 31. Remove Retainer cover, Shims, and Retainer

9. Remove thrust tube from socket with caution, taking care that the ball comes out of the socket evenly. Protect ball and socket with plastic bags to avoid contamination by dirt and dust.

10. The forward thrust ball retainer may come out of the socket along with the thrust ball. Do not drop the forward thrust ball retainer. The forward retainer can be reused if it is not damaged or worn.

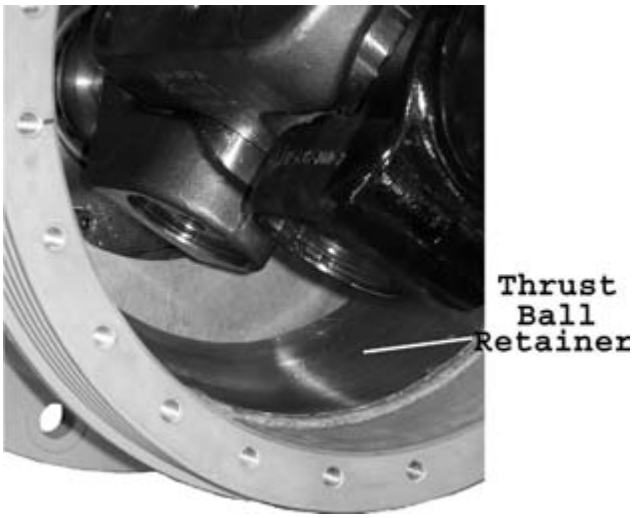

Figure 32. Inner (Forward) Thrust Ball Retainer with Packing

11. Store thrust tube securely without anything touching the ball.

Complete Removal of Arneson Surface Drive Unit from Transom

⚠ WARNING

Always disconnect the battery cables and remove the key from the ignition before beginning this procedure.

⚠ CAUTION

Support the Arneson Surface Drive with a block and tackle, forklift or other system capable of carrying the weight of the surface drive. Do not allow the thrust tube to angle down to the point where the ball/thrust tube assembly makes contact against the thrust socket. Severe damage to the ball and the socket could result.

1. Remove the battery cables and remove the key from the ignition.

2. Support the drive with a block and tackle, forklift or other system capable of carrying the weight of the surface drive. Do not allow the thrust tube to angle down to the point where the ball/thrust tube assembly makes contact against the thrust socket.

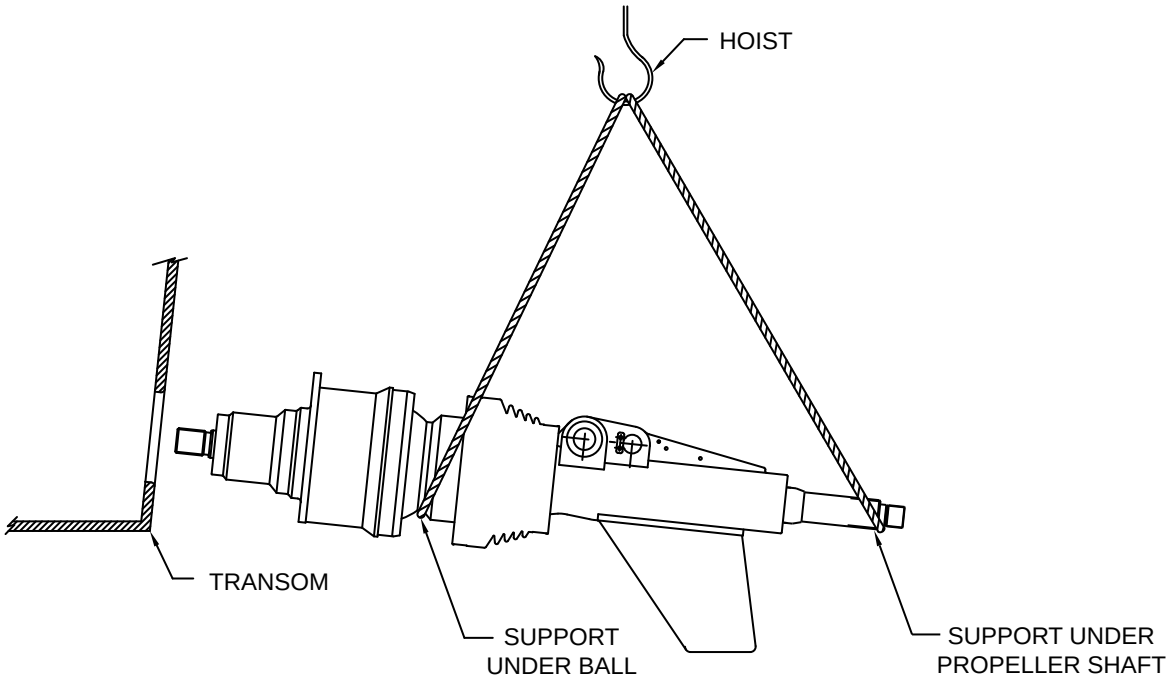

Figure 33. Support Unit for Removal

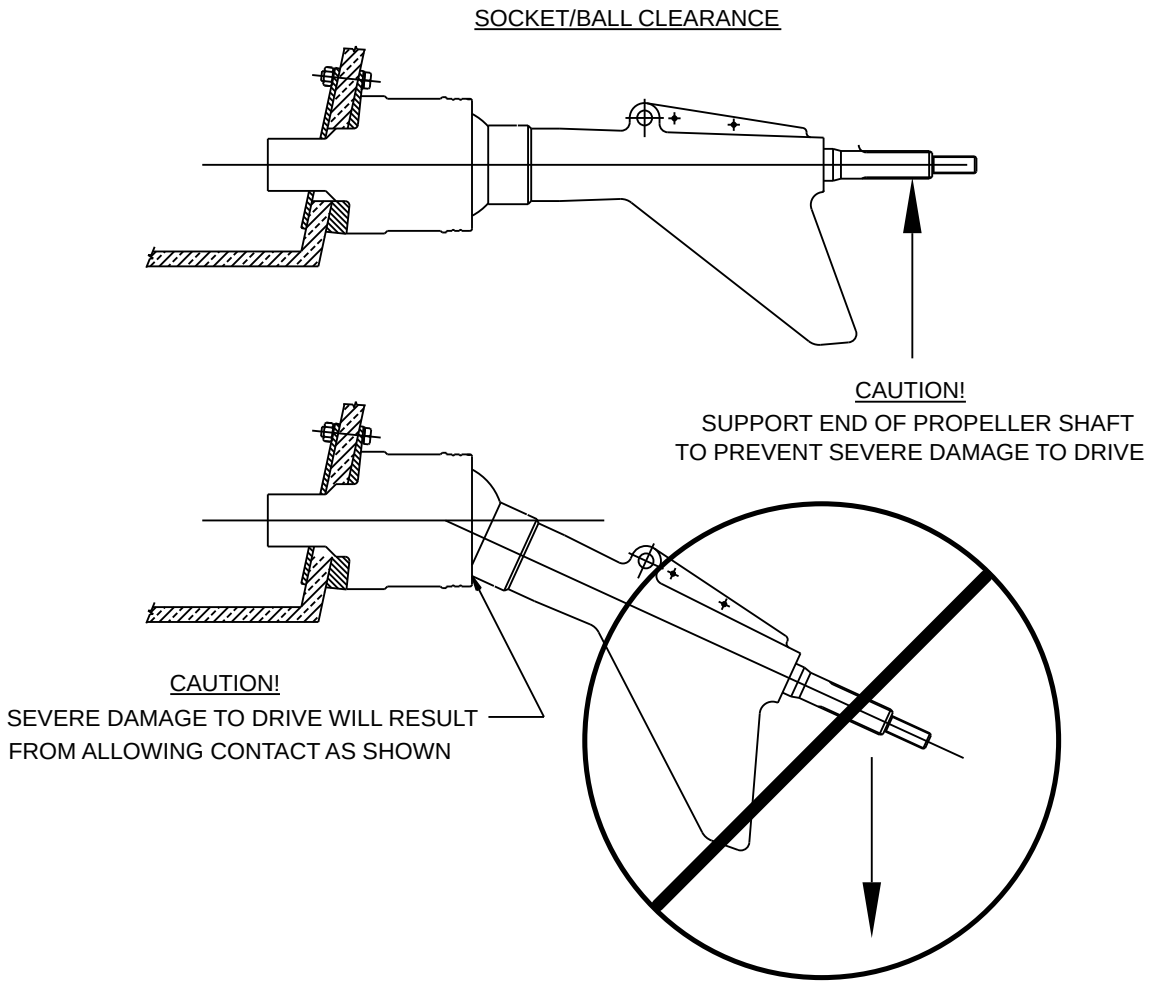

Figure 34. Protect Ball from Damage

3. Remove the cotter pin and jam nut. Loosen the propeller nut until it is flush with the end of the shaft to prevent damage when the propeller moves from the tapered pilot. Remove the propeller from the splined shaft using suitable pullers, soft blocks and mallets as necessary, allowing the propeller to stop against the spacer and propeller nut. Remove the propeller nut, spacer, and propeller from the rear end of the propeller shaft.

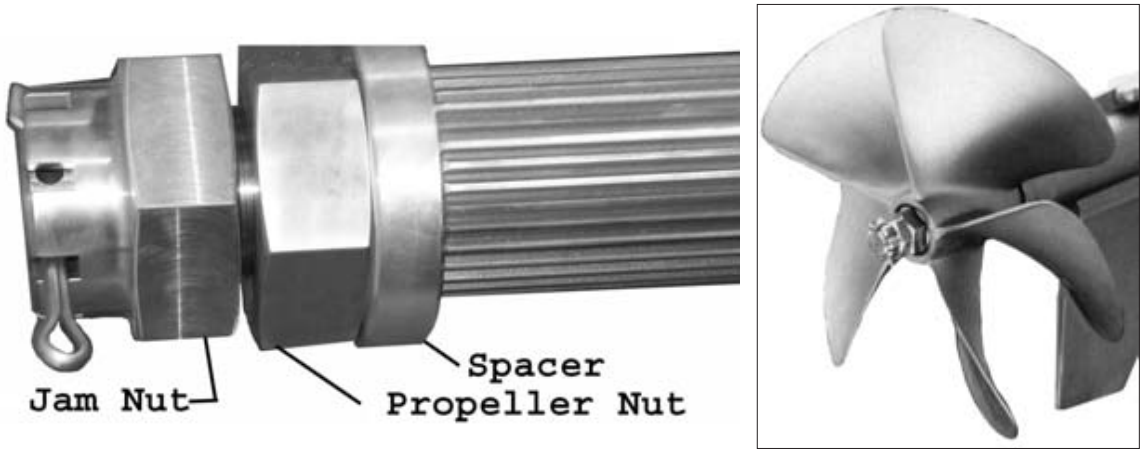

Figure 35. Propeller Retaining Parts (left), and Propeller Installed (right)

4. Drain the oil from the Arneson Surface Drive through the drain holes in the housings or from the lower oil reserve hose inside the boat.

5. Disconnect the steering cylinder from the trim cylinder yoke pin. Disconnect the tie bar from the tie bar pin. Remove the trim cylinder yoke pin and the tie bar pin.

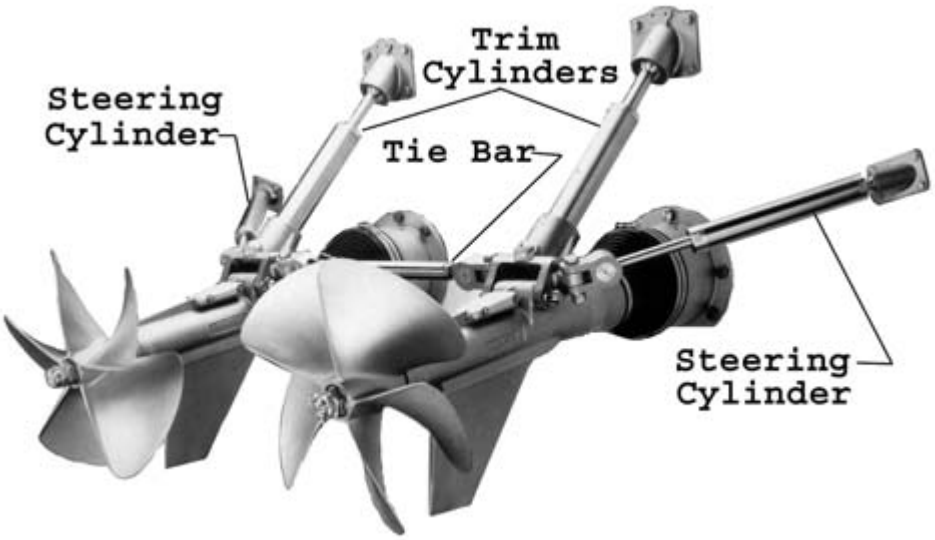

Figure 36. Rear View of Dual Installation Showing Cylinders and Tie Bar

6. Disconnect the driveline companion flange. Remove the retainer washer bolts and the retainer washer from the end of the Arneson Surface Drive input shaft. Additional removal of driveline components may be required to allow access to the companion flange retainer washer.

⚠ WARNING

Do not cradle the Arneson Surface Drive on the prop shaft or input shaft. Damage to the unit could result.

7. Properly support both the socket and thrust tube to prevent the Arneson Surface Drive from falling upon removal of the mounting bolts.

8. Remove the socket mounting nuts and washers. Cut or scrape as much sealant as possible from the edges of the socket. Avoid scratching or other damage to the transom. Use a blunt tool when pryijng the socket flange from the transom. Apply force slowly and evenly at several points on the flange. Drive should now slide away from transom Take care not to damage the input shaft spines during the removal of the Arneson Surface Drive from the transom.

9. Place Arneson Surface Drive on suitable blocks or stands. Be sure to support both the socket and thrust tube.

Disassembly

Disassembly Overview

The disassembly instructions that follow are separated into major sub assemblies:

- ❑ **Disassembly of the thrust socket from the thrust tube**
- ❑ **Thrust tube disassembly**
- ❑ **Propeller shaft disassembly**
- ❑ **Thrust socket disassembly**
- ❑ **U-joint / input shaft disassembly**

Disassembly of the Thrust Socket from the Thrust Tube

1. Attach tool T-21172-4 securely to the propeller shaft and use a hoist to stand the Arneson Surface Drive in a vertical position.

⚠ CAUTION

Do not damage the input shaft when lifting the ASD unit. Use enough blocks to keep the input shaft from contacting the floor.

2. Place suitable blocking under the socket and lower the socket onto the blocks. Use the hoist to support the thrust tube and prevent it falling to the side.

3. Remove the 16 7/16-14 x 1.25 socket head capscrews, and remove the fin and set it aside.

4. To disassemble the socket from the thrust tube, remove the forward pair of circle clamps on the rubber boot and push the boot up over the thrust tube or remove all clamps and slide it over the thrust tube.

Figure 37. Remove Clamps and Raise Boot Up Onto Thrust Tube

5. Remove the retainer (wear sleeve) cover bolts (24 1/2-13 x 1.50 socket head capscrews).

Figure 38. Remove Capscrews from Cover

6. Remove the retainer (wear sleeve) cover, shims and retainer (wear sleeve).

7. Remove thrust tube from socket with caution, taking care that the ball comes out of the socket evenly.

8. The forward thrust ball retainer may come out of the socket along with the thrust ball. Do not drop the forward thrust ball retainer. The forward retainer can be reused if it is not damaged or worn.

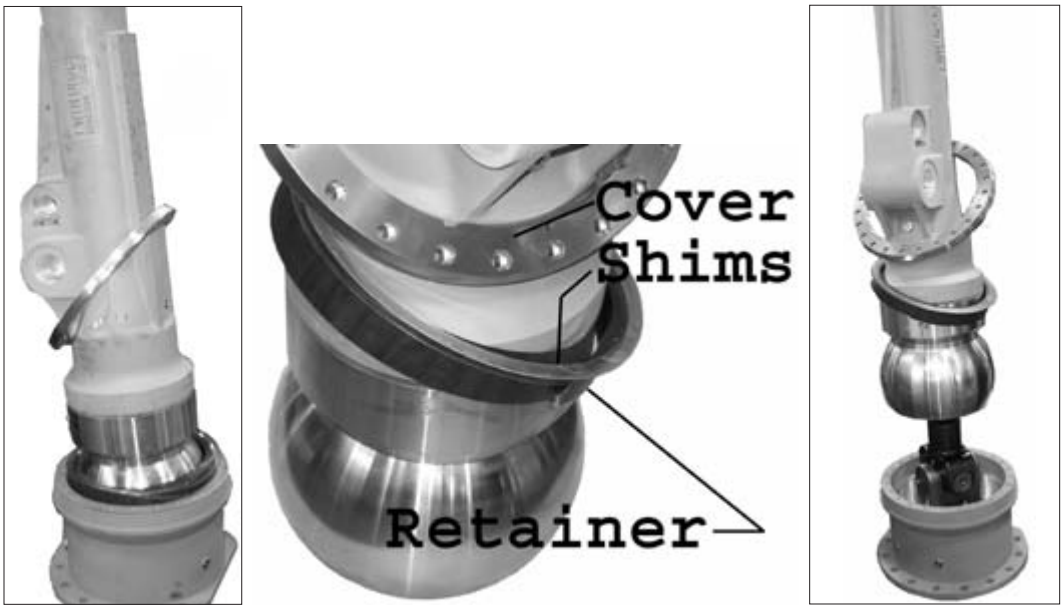

Figure 39. Remove Cover, Shims, Retainer, and Raise Thrust Ball Assembly

9. Store thrust tube securely without anything touching the ball. Protect the spherical surface of the ball from scratches and dents.

10. Cover the socket assembly, the thrust tube and ball to protect from moisture and dirt.

Thrust Tube Disassembly

1. Place the thrust tube vertically in the assembly stand with the output end facing up. See T-21089 Assembly Stand in **Special Tools section**.

2. Remove the cover (rope guard) screws and the cover. Remove the eight setscrews and remove the retainer (abutment) ring.

Figure 40. Remove Cover (Rope Guard, Remove Retaining Ring, Seals, Spacer, and O-rings

3. Using a fine file, remove any burrs left by the set screws on the sleeve surface.

Note: On the following **drive assemblies with mechanical face seals (1007027A, 1007027B, 1018347, and 1018684)**, a small shallow hole (dimple) will be seen on the seal sleeve under each of the retaining ring setscrews. The setscrews in these drives will have a cup point. **(Holes should only be present on sleeves, not the shaft itself. If holes are found in the shaft, it must be replaced.)**

On assemblies 1020763 and 1021360, the seal does not rest on a sleeve but is installed directly onto the shaft. The setscrews should must have a plastic tip. There should not be any small holes (dimples) on the surface of the shaft itself. There may be small impressions in the shaft surface caused by the soft setscrews (these impressions are harmless).

4. Carefully remove the rear half of the face seal from the output shaft using the special tool T-18050-641. The seal may be reused if it is not damaged. Store the face seal and seat covered in a clean, dry area. Carefully remove the seat from the inside of the seat housing, using special tool T-18512. Remove the retaining circlip, and remove the seat housing using the M2.5 tapped holes in the rear face for puller legs if necessary.

⚠ CAUTION

The ceramic carbide seal faces are extremely fragile and will easily crack or chip when dropped or when subjected to impact from a hard object. To avoid serious damage, do not allow the two seal faces to be packed in contact with each other. Pack the forward seat separately from the rotating assembly.

5. Carefully wrap the rotating assembly in thick, soft packing such as bubble wrap to protect the ceramic faces from damage. A minimum of one inch thick packing material is recommended. Store the seal components in a box to accommodate the seals and a large amount of soft packing.

6. Rotate the thrust tube in the assembly stand so that the input end is facing up. If a stand is not available, a suitable support should be made.

Figure 41. Rotate Thrust Tube Assembly so Ball is Up, Remove 12-point Capscrews

7. Remove the screws holding the thrust ball to the thrust tube. Use a 3/4 in. 12-point socket wrench. Lift the ball using Special Tool T-22031-5.

8. Slide the thrust ball out of the thrust tube. Remove the o-ring from the bottom of the thrust ball. When sliding the thrust ball out of the thrust tube, watch for the shim pack located between the thrust ball shoulder and thrust bearings. The shims may stick to the ball shoulder, or the thrust bearing.

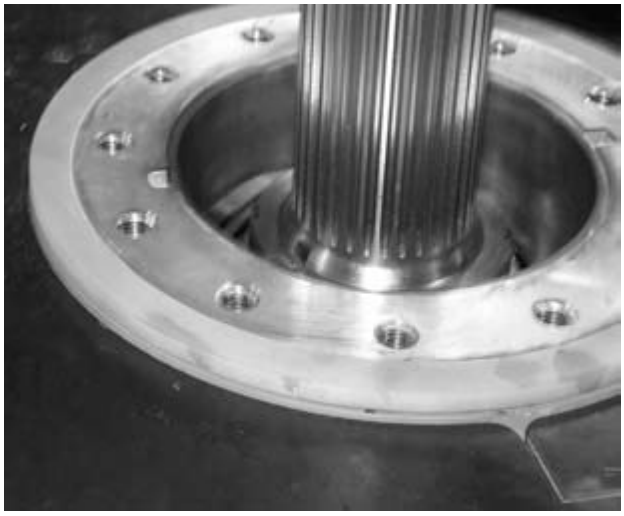

Figure 42. Raise the Ball from the Thrust Tube, Remove O-rings, Shims and Isolator

9. Place the ball aside and inspect for scratches, dents or rough edges. If scratches, dents, or roughness are found, smooth the ball surface with a fine emery cloth or similar material. Do not create flat spots on the ball's outside surface. Protect the ball surface from scratches and dents.

10. Remove the isolator and o-ring from the face of the thrust tube housing. Check inside of the housing for the remaining shims located against the thrust bearings. If the original bearings will be used in reassembly, save the shims. If the original bearings will **not** be used in the reassembly, a new shim pack will be developed during reassembly.

11. Install a 1/2 in.-20 UNF eyebolt into the tapped hole on the forward end of the propeller shaft. Attach a hoist to the threaded eye bolt, and lift the propeller shaft from the thrust tube. It may be necessary to tap the end of the shaft while lifting to remove the upper bearing cup. Use care to avoid damage to the bearings and seal sleeve. Support the shaft on wooden blocks.

⚠ CAUTION

Do not strike the end of the propeller shaft without a wood block or other suitable protection against the shaft. Failure to protect the shaft can cause damage.

Figure 43. Install Eyebolt Into Shaft, Raise Shaft Assembly Out of Thrust Tube

⚠ CAUTION

Use caution if using heat on the housing. This could damage the painted finish.

Thrust Bearing Sleeves

12. **Assembly 1018684 and earlier drives with two (one large and one small) thrust bearing sleeves**: Mark the angular location of the bearing sleeves in the thrust tube.

    Note: If the bearing sleeves (in units with two thrust bearing sleeves) are removed from the thrust tube, they must be reinstalled in the same angular location in the thrust tube.

    Assemblies 1020763 and 1021360 – the thrust bearing sleeve is fitted with screws to hold the sleeve against the shoulder of the thrust tube housing. The screws also prevent rotation of the sleeve during operation.

    On 1021360 these screws are spaced unequally, providing automatic angular positioning of the sleeve. Should the sleeve be removed, it cannot be re-installed in the wrong angular position.

    Assembly 1018684 and earlier drives with plain propeller bearing sleeve – a small pin is located at top-dead-center (TDC). It is located half in the sleeve and half in the housing to locate the sleeve's angular position and to prevent rotation. Should the sleeve be removed, be sure to re-install it with the pin hole in the same position.

    Assemblies 1020763 and 1021360 with keyed propeller bearing sleeve (1020798) – the propeller bearing sleeve has four (4) key slots machined into its aft face. These slots engage keys on the seal mounting sleeve (1020797). One of these keys is narrower than the others to establish the sleeve's angular position. The narrow key must be located at top-dead-center when re-installing the sleeve. (Tools T-18050-792, T-18050-793, and T-18050-794 are used to reinstall the sleeve with this correct angular orientation.)

13. Rotate the thrust tube to the horizontal position. Insert a long rod or drift into the rear of the thrust tube. Tap the rod evenly around the cup with a mallet until the cup is free. Discard the bearing cup.

14. Flush the thrust tube using clean solvent to remove any dirt or other materials trapped inside. All components, such as shafts, retainer rings, etc., should also be cleaned prior to reassembly. See the **Cleaning and Inspection** section.

Propeller Shaft Disassembly

Thrust Bearings

1. On the forward end of the prop shaft, remove the lock nut that holds the inner and outer taper bearings in place. The lock nut is retained by a lock washer with a fold-over tab. The tab must be bent away from the lock nut. Turn the lock nut counterclockwise for removal. Use a hammer and punch or a spanner wrench to loosen the lock nut.

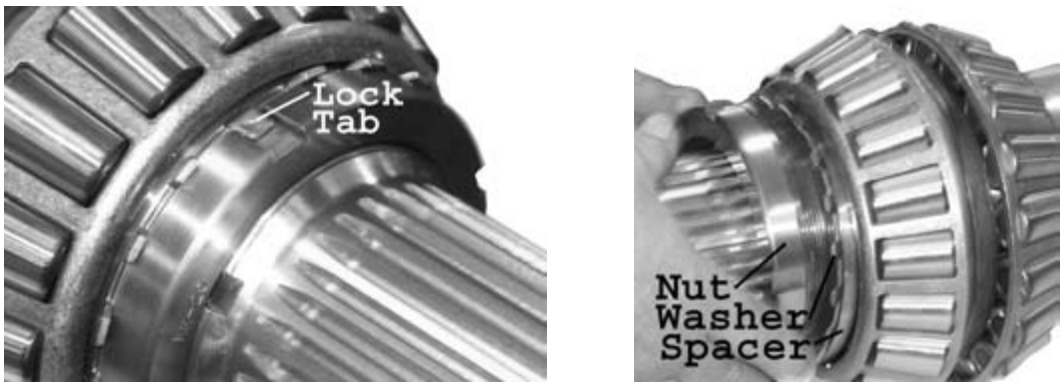

Figure 44. Bend Lock Tab Up, Remove Nut, Washer, and Spacer

2. Remove the lock washer and spacer. Discard the lock washer.

3. The tapered bearings can be removed with heat or by cutting the bearings off the shaft.

⚠ CAUTION

Use extreme caution when cutting bearings away from the shaft. Do not cut or scratch the shaft. Damage to the shaft will cause the loss of press fit on the races, bearings or seal surfaces and will weaken the shaft.

⚠ CAUTION

Use extreme caution when applying heat to the shaft or parts on the shaft. Avoid applying heat directly to the shaft. Excessive heat will distort the shaft and will cause the temper to be removed (i.e., the shaft will become soft and weak at the location of the burn). If too much heat is applied, check the runout of the shaft on suitable inspection equipment. *Before performing any hardness tests on a propeller shaft or input shaft, consult with a Twin Disc representative.*

A. **To Remove Bearings with Heat:** To remove the bearings with heat, first break the bearing cage with a chisel and remove it and the tapered rollers. Attach adapter T-21172-4 with a swivel hook to the propeller end of the shaft. Hoist the shaft to the vertical position with the propeller end up and quickly heat the inner races with an acetylene torch until the races drop off.

B. **To Remove Bearings by Cutting:** To cut bearings off, use a cutoff wheel with a carbide or composition wheel. Cut through the bearing cages. Remove the cages and the tapered rollers. Cut a groove in the inner race that is approximately half way through the race. Split the race with a chisel and slide the race off the shaft.

Figure 45. Use Chisel to Cut Bearing Cage to Remove Rollers

Propeller Bearings and Seal Sleeves

1. **Assembly 1018684 and all earlier drives with either mechanical face seal or with lip seals** – On the propeller end of the shaft, remove the seal sleeve by heating. Hang the shaft as in 3.A. above. . Apply heat quickly and carefully. Keep the flame on the sleeve and avoid the shaft (See caution note on previous page).

   If the sleeve will not fall freely from the shaft, it will be necessary to cut (split) the sleeve as described above in 3.B. (See caution note on previous page regarding protecting the shaft). Heat will not be necessary after the sleeve is cut; it should be mechanically removed once the tension is removed from the sleeve-to-shaft fit. (The o-ring within the sleeve may prevent it from falling freely from the shaft)

   Note: It is very important to remove the sleeve to properly inspect the shaft surfaces that are hidden from view.

   Assembly 1007027 and earlier drives with cylindrical propeller bearings: The propeller bearing rollers and cage will remain in the housing when the shaft is removed. The inner propeller bearing race may be removed in the same way as is described for the sleeves above – either mechanically or with heat.

2. Clean and inspect the shaft for damage on critical dimension surfaces. See the **Cleaning and Inspection** section of this manual.

Thrust Socket Disassembly

1. **Preparation:** Before disassembly of the thrust socket, it must be removed from the transom, and it must be separated from the thrust ball assembly.

2. Place the socket on a bench with the large diameter end facing up. Remove the packing shims, o-ring and packing from inside the socket housing.

3. The forward retainer is a slip fit and should slide out of the socket with little effort. Remove the forward retainer.

Figure 46. Remove Packing and O-ring, Remove Retainer

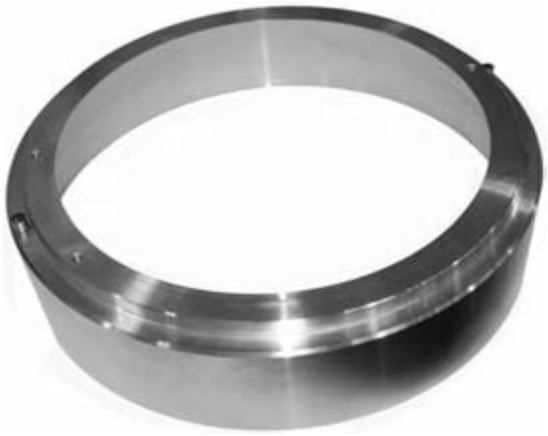

Figure 47. Remove Packing and O-ring, Remove Retainer

4. Remove the aft tapered bearing sleeve bolts that are located inside the socket.

5. Use a hoist to lift the input shaft assembly, which consists of the U-joint, input shaft, bearings and sleeve, from the socket housing. Place the input shaft assembly aside for disassembly later.

Figure 48. Remove Bearing Sleeve Bolts

Figure 49. Lift Input Shaft Assembly Out of Housing

6. Remove the bearing sleeve shims from the socket housing. Shims may sometimes stick to the bearing sleeve during its removal.

7. Remove the front bearing cup from inside the socket housing. The bearing cup is a slip fit and should slide out of the housing with little effort. If necessary, tap lightly against the bearing lip to assist in removal. Do not damage the bearing because it may be reused if there is no damage or excessive wear.

8. Turn the socket housing over so that the input-end is facing up. Remove the seal carrier retaining ring and the seal carrier from inside the small diameter end of the socket.

9. Remove the seals from the carrier and discard. Replace all seals and o-rings.

Figure 50. Housing with Seals and Snap Ring Removed Both Ends Shown

10. **Inspection:** Flush the thrust socket housing and components with clean solvent to remove all chips or debris. Visually inspect all parts for damage or dirt. Inspect all seal or bearing surfaces for wear or damage. The forward retainer should be free from any rough edges or burrs. Smooth any rough areas with 400 grit or finer emery cloth. See **Cleaning and Inspection** section of this manual.

    Note: The forward and aft edges of the forward retainer are manufactured with as sharp an edge as practical to assist in excluding dirt and debris from the spherical bearing surface. Protect these edges from even the slightest dent or scratch. Accidental damage to these edges must be smoothed by hand-working with a machinist's scraping tool, files, and emery cloth. Restore the spherical surface if it is locally deformed.

U-joint / Input Shaft Disassembly

1. **Assemblies earlier (lower numbers) than 1021360**: Once the input shaft with the universal-joint is removed from the socket housing, separate the u-joint from the shaft. Clamp the U-joint's H-shaped center coupling in a vise. The U-joint should be positioned so it looks like an H on its side with the bottom leg of the H in a vise. Remove the retainer bolts and washer holding the U-joint to the input shaft.

2. Tie the bearing sleeve to the shaft with a cable tie or equivalent to retain it while the u-joint is removed.

3. Slide the shaft out of the splines of the yoke taking care that the loose bearing sleeve is restrained to prevent damage.

Figure 51. Stand Shaft Assembly and Support

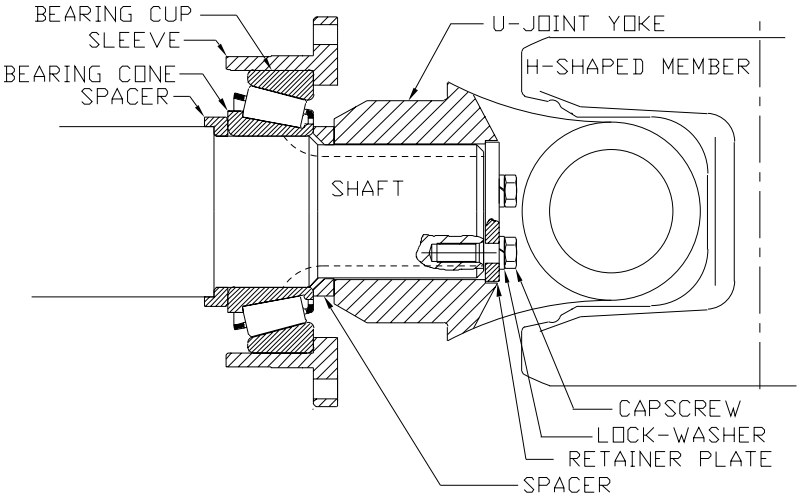

Figure 52. Remove Bolts, Raise U-joint

4. Remove the bearing cup from the bearing sleeve. The bearing cup is a light press fit in the sleeve and should slide out of the sleeve with little effort. With the sleeve placed on a table, flange side upward, tap against the cup to assist in removal, or apply even heating to the sleeve outer diameter.

Figure 53. Bearing Cup and Bearing Sleeve

5. Remove the aft input shaft bearing from the input shaft using a split type bearing puller. If necessary, see propeller shaft disassembly for Removal by Heat.

Figure 54. Input Shaft with Bearings and Seal Wear Sleeve

6. Stand the input shaft on the bench, with the forward end down on the bench. Remove the seal wear sleeve. It may be necessary to use an acetylene or butane torch to quickly heat the sleeve.

7. Remove the forward bearing from the input shaft using a split type bearing puller. (The cutting method can be used here if desired.)

8. **Clean and Inspect:** Clean all parts and inspect for damage. Examine the seal sleeve for scratches on the seal surfaces and clean the area with a 400 grit or finer emery cloth. Inspect the yoke splines for burrs and remove if present. See **Cleaning and Inspection** of this manual.

⚠ CAUTION

Use extreme caution when removing rough edges or burrs from critical shaft surfaces. Removing excess material will cause the loss of press fit on races, bearings or seal surfaces.

If the U-joint requires further disassembly, Twin Disc recommends that the work be performed by qualified personnel familiar with U-joint disassembly and assembly.

For service on universal joints, Twin Disc recommends the following:

- ❑ Driveline specialty shop
- ❑ Authorized Twin Disc / Arneson repair facility
- ❑ Twin Disc, Incorporated factory

Cleaning and Inspection

Cleaning

Note: Replace all oil seals, gaskets, O-rings, packing, retaining (snap) rings, etc., as a part of any maintenance or overhaul procedure. Replace shims that are damaged or destroyed in disassembly.

Clean all parts using EPA/OSHA approved solvents or by steam cleaning. Parts must be dried and oiled immediately. Bearings should not be exposed to moisture.

Examine all parts carefully for grit, dirt and abrasives and reclean them if necessary.

Clean all oil passages by working a piece of wire back and forth through the passages and then flushing them with cleaning solvent.

Use clean solvent to flush oil pumps, valves, etc.

Flush all hoses, tubing, coolers etc., particularly if the unit is being disassembled because of an internal failure.

De-burr the housings and bearing carriers with a stone or file in the vicinity of all pusher screw locations.

Cleaning Bearings

Do not remove grease in which new bearings are packed. Thoroughly wash bearings that have been in service. Soak bearings in solvent if they are particularly dirty or filled with hardened grease.

⚠CAUTION

Never dry bearings with compressed air. Do not spin non-lubricated bearings. Oil bearings with SAE 10 engine oil immediately after cleaning. Oil bearings before inspection.

Preventing Dirt from Entering into Bearings

Dirt and grit in bearings are often responsible for bearing failure; consequently, it is important to keep bearings clean. Do not remove grease from new bearings. Keep the wrapper on new bearings until they are installed. Do not expose clean bearings if they are not to be assembled at once. Wrap them with a clean lint-free cloth or paper to keep out dust.

Previously Sealed Joints

Scrape surfaces to remove old gasket material on previously sealed joints. Wipe off cured sealant with gel-type paint remover containing methylene chloride.

⚠CAUTION

Do not get paint remover or gasket remover on painted surfaces.

Clean surfaces with denatured alcohol or clean solvent to remove oil and grease residue.

Test for clean surfaces by applying a few drops of cool water to the surfaces. Parts are sufficiently clean if water covers the surface in a film. If the water puddles or forms beads, use fresh solvent and reclean.

Inspection

Housings, Cast Parts, and Machined Surfaces

1. Replace cast parts or housings that are cracked.

2. Inspect bores for wear, grooves, scratches and dirt. Remove burrs and scratches with crocus cloth or soft stone. Replace deeply grooved or scratched parts. Do not remove excess material by sanding. This will cause loss of press of bearings or races.

3. Inspect oil and grease passages for obstructions. If you find an obstruction, remove it with compressed air or work a wire back and forth through the passage and flush it with solvent.

4. Inspect machined surfaces for burrs, scratches, nicks and foreign matter. If you cannot remove the defect with crocus cloth or a soft stone, replace the part.

5. Inspect threaded openings for damaged threads. Chase all threads with a thread chaser of the correct size to remove old loctite material.

6. Inspect studs for damaged threads and looseness. Replace defective studs.

7. Inspect dowel pins for wear or damage. Replace defective dowels. This applies where a matched set of parts is not involved.

8. Inspect dowel pin holes for wear due to movement between mating parts. If a dowel pin hole is worn, re-bore and sleeve the hole when possible. Otherwise, replace the parts. This applies where a matched set of parts is not involved.

Bearings

1. Inspect bearings for roughness of rotation. Replace the bearing if the rotation is rough.

2. Inspect bearings for corrosion, and for indication of wear of balls or rollers. Inspect for scored, scratched, cracked, pitted or chipped races. Replace the bearing if you find one of these defects, .

3. Inspect bearing bores and shafts for grooved, burred, or galled conditions that would indicate the bearing has been turning in its housing or on its shaft. If you cannot repair the damage with a crocus cloth, replace the part.

Bushings and Sleeves

Inspect bushings and sleeves for size and out-of-roundness. Inspect for scores, burrs, sharp edges, and evidence of overheating. Remove scores with a crocus cloth. If the bushing or sleeve is out-of-round, deeply scored, or excessively worn, replace it. If there is any question, replace.

Splined Parts

Inspect splined parts for stripped, twisted, chipped or burred splines. Remove burrs with a soft stone. Replace the part if other defects are found.

Flexible Hoses

Inspect all flexible hoses for cracks and sponginess. Replace damaged hoses.

Assembly

Assembly Overview

Figures of special tools are located in **Special Tools**. References to special tool numbers are made when required.

See **Engineering Drawings** for the location and description of the referenced components.

Refer to **Description and Specifications**, **Troubleshooting** and **Preventative Maintenance**, for all lubrication specifications.

Propeller Shaft Assembly

Note: Heat/Shrink Assembly Methods: When using heat/shrink methods of assembly, components should be installed by hand. Occasionally, when performing this procedure, a race or bearing may become misaligned in a housing, or on a shaft, and will not slide properly into place. Always have standby tools, such as a drift and plastic mallet, available to tap components into place. Use light taps only when trying to realign a component.

1. Heat the following parts to 121˚C (250˚F):

   - ❑ Two (2) tapered roller bearings
   - ❑ One (1) spherical roller bearing
   - ❑ One (1) seal sleeve with o-ring in place in the inner diameter

2. Support the shaft in a horizontal position on blocks allowing enough radial clearance for installation of the bearings. Apply a thin coat of **"Molykote P37 Ultra Pure High Temperature Paste"** to the shaft on the surfaces where the bearings will seat as an anti-seize compound.

   Application instructions: Apply a thin even coating of paste onto component surfaces. Rub thoroughly into surfaces with a clean lint free cloth, leaving a coating depth less than 0.003 mm (0.0001 in).

⚠ CAUTION

Excessive coating depth will result in sleeve and bearing distortion and may prevent bearing assembly and reduce bearing life. Depth of Molycote P37 should not be visible to the naked eye.

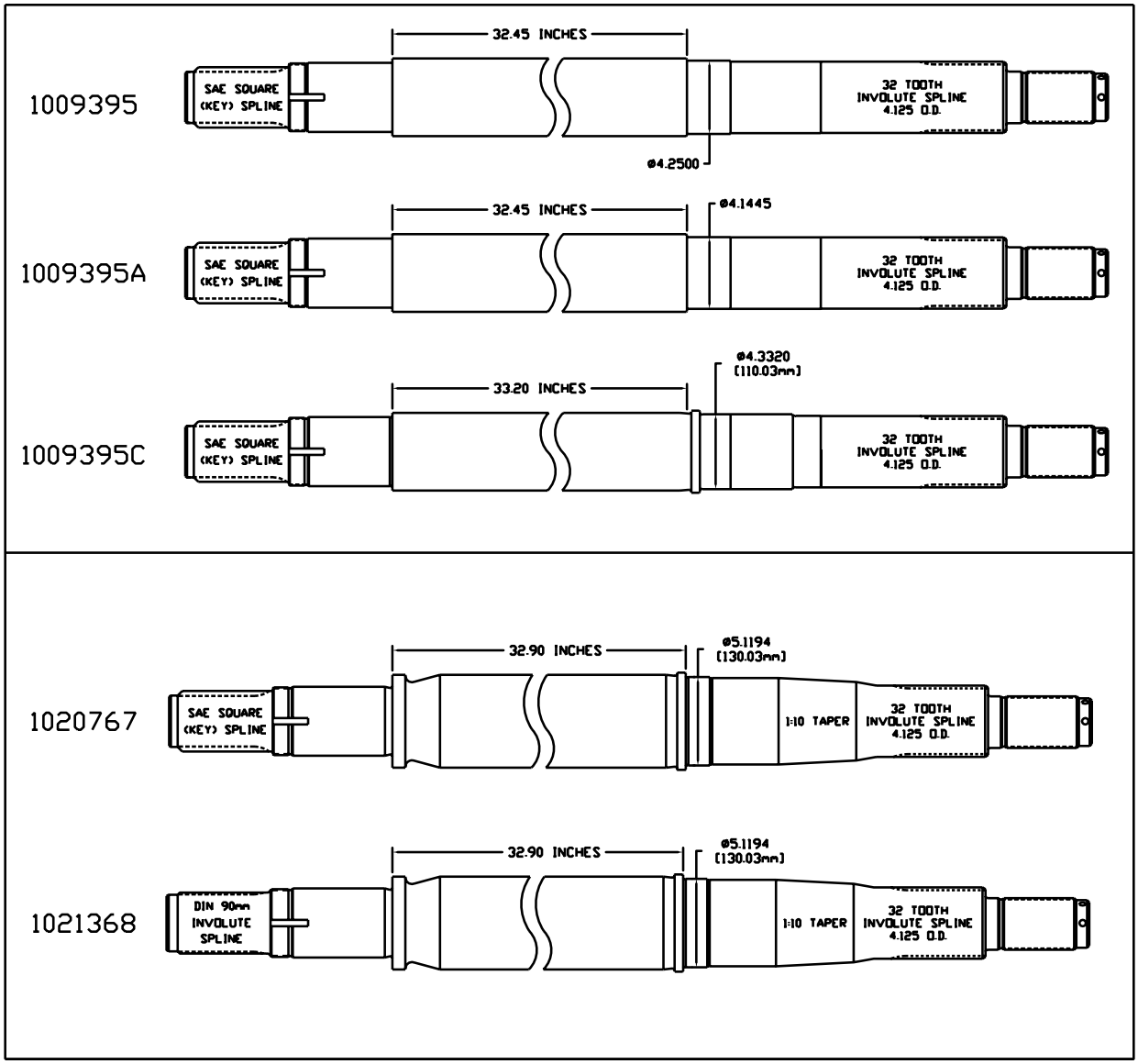

Figure 55. Propeller Shaft — Identification

3. **Assemblies 1018684, 1007027A, and earlier drives with one large thrust bearing and one small thrust bearing:** Place the inner tapered bearing cup onto the shaft with its taper facing the forward end of the shaft. Let it rest on the shaft body just behind the shoulder.

   Install the inner tapered roller bearing cone onto the forward end of the propeller shaft with the small end against the shoulder. The bearing cone must be heated prior to installation.

   Install the large tapered bearing cone with its large end facing the other bearing. It also must be heated prior to installation. Continue to apply force against the bearings until they are cool enough to take hold on the shaft.

   Assemblies 1020763, 1021264, and 1021360 with two same-size thrust bearings: These drives do not have a small thrust bearing and therefore the aft thrust bearing cup may be omitted in this step. The aft thrust bearing cup may be installed in the thrust tube later (see Thrust Tube Assembly Section).

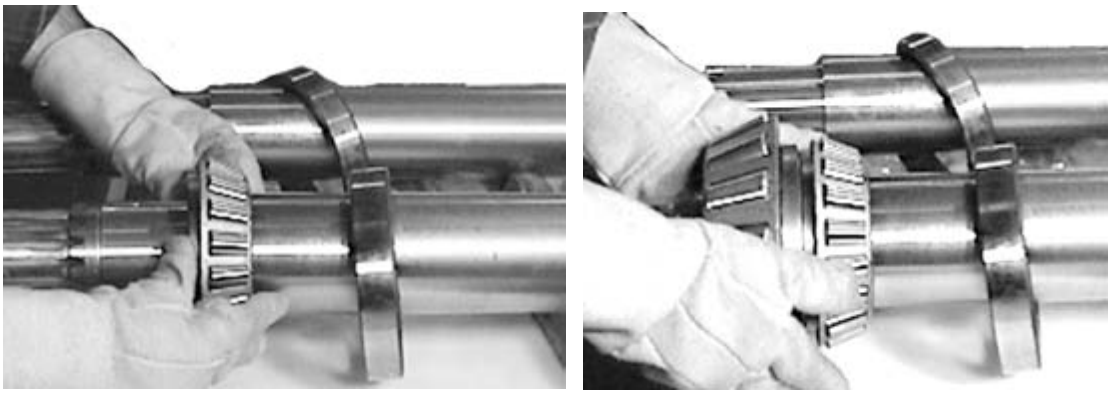

Figure 56. Install Bearing cup Followed by the two Bearings

4. Install the spacer, followed by the lock washer with the tabs pointing toward the threaded portion of the shaft. Install the nut with its tapered end facing the washer. If a spanner wrench is not available, tighten the threaded lock nut by placing a drift in the lock nut notch and tapping the drift with a mallet. Torque the lock nut to at least 136 N-m (100 ft-lbs) to firmly seat the bearings against the shaft shoulder. Secure the lock nut by bending a locking tab on the lock washer into the adjacent slot on the lock nut.

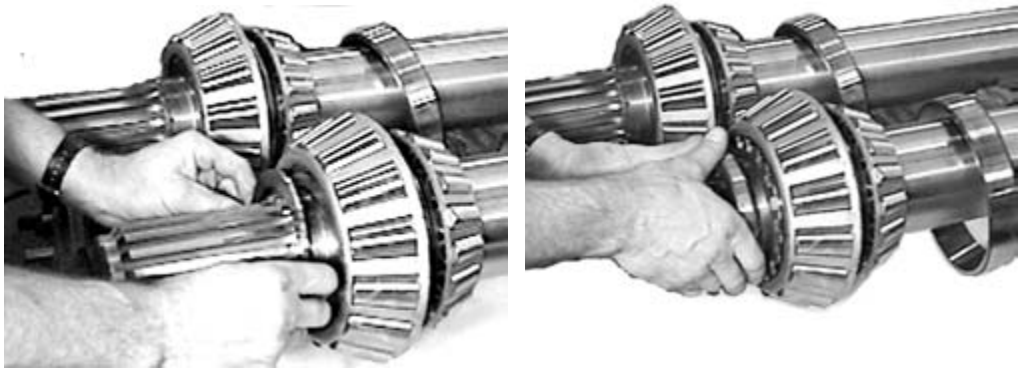

Figure 57. Install Spacer, Washer, and Locking Nut

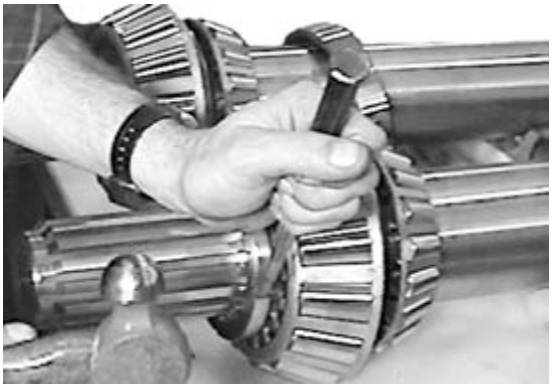

Figure 58. Tighten Nut

Figure 59. Bend Tab Into Slot

Note: **Assemblies 1018684, 1007027A, and earlier drives with one large thrust bearing and one small thrust bearing:** Verify that the thrust bearing cup is present at the forward end of the shaft body. The thrust bearing cup cannot be passed over the propeller bearing after the bearing is installed.

Assemblies 1020763, 1021264, and 1021360 with two same-size thrust bearings: These drives do not have a small thrust bearing and therefore the aft thrust bearing cup is not needed at this step.

5. Install the heated spherical bearing onto the propeller end of the shaft and seat it against the shoulder on the shaft.

6. **Assemblies 1018684, 1007027A, and earlier drives with seal sleeves:** Confirm that the o-ring is in the groove in the inside diameter of the seal sleeve. Install the heated seal sleeve onto the propeller shaft. Use special tool T-18050-777 to seat the sleeve against the spherical bearing. As the sleeve cools, re-seat the sleeve making sure it remains tight against the bearing.

   Assemblies 1020763, 1021264, and 1021360 with two same-size thrust bearings: These drives do not have a small thrust bearing and therefore the aft thrust bearing cup is large enough to pass over the propeller bearing during assembly.

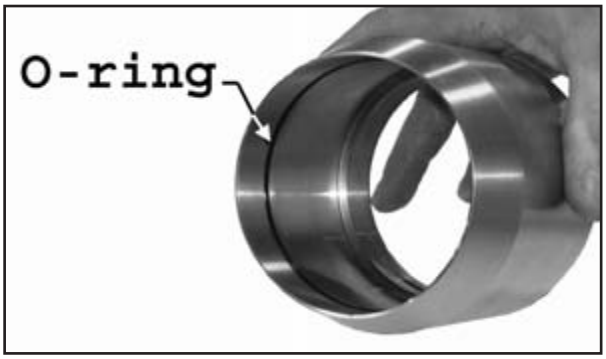

Figure 60. O-ring Shown In Sleeve

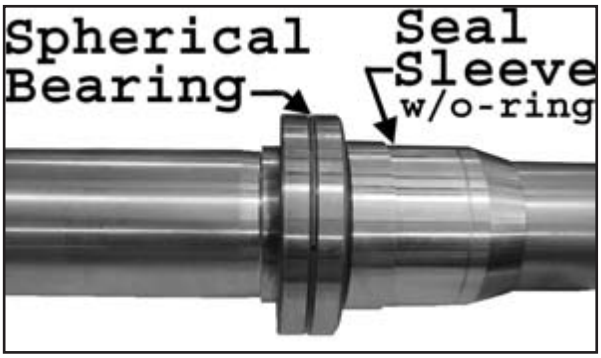

Figure 61. Spherical Bearing and Sleeve shown installed on the Shaft

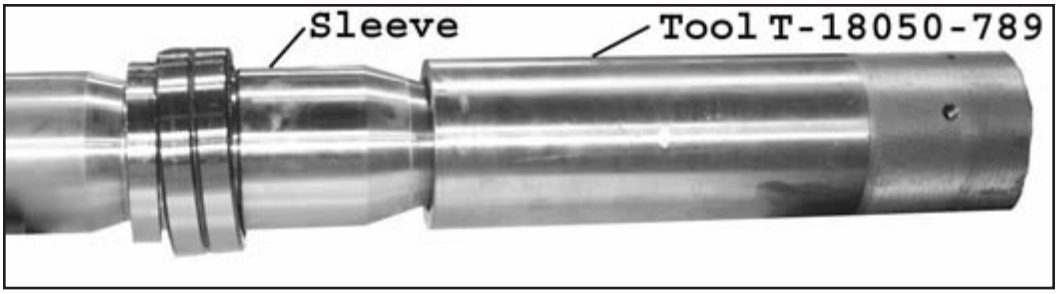

Figure 62. Use Special Tool T-18050-789 to Seat the Sleeve Against the Bearing

CAUTION

Do not allow dust or debris to settle on bearings or components. Failure to keep components clean will result in damaged parts.

7. Lubricate the bearings, and set this assembly aside. Cover and protect the bearings and splines. Do not allow dust or debris to settle on bearings or components.

Thrust Tube Assembly

1. **Drives with one large thrust bearing and one small thrust bearing:** Freeze the front tapered roller bearing cup to a temperature of -29˚C (-20˚F).

   Drives with two same-size thrust bearings: Freeze both thrust bearing cups to a temperature of -29˚C (-20˚F).

2. Stand the thrust tube housing in the vertical position with the large diameter end up, and with at least 584 mm (23 in) of clearance between the housing and the floor to allow room for the propeller shaft. A roll-over stand over a pit works very well if available. See T-21090 in Special Tools Chapter.

3. Thread a 1/2 in.-20 swivel eyebolt into the tapped hole on the forward end of the propeller shaft. Attach a hoist to the eyebolt. Lubricate the bearings and the races on the propeller shaft with 10 wt or 30 wt oil.

4. Slightly heat the housing in the upper area where the bearing outer races (cups) will be placed, and in the lower area where the spherical bearing will be placed. This will aid in the assembly of these bearings into the housing.

Figure 63. Thrust Tube Housing Shown In Stand

Figure 64. Heat Housing in Bearing Area

5. **Drives with two same-size thrust bearings:** Before installing the bearing cups, check that there are four (4) screws holding the thrust bearing sleeve into the housing. Verify that the screws are torqued to 2300 N-mm (20 inch-lbs). Install one bearing cup into the thrust tube sleeve with the open taper facing outward (toward the engine). Ensure that it is seated against the inner shoulder before it seizes in the sleeve bore.

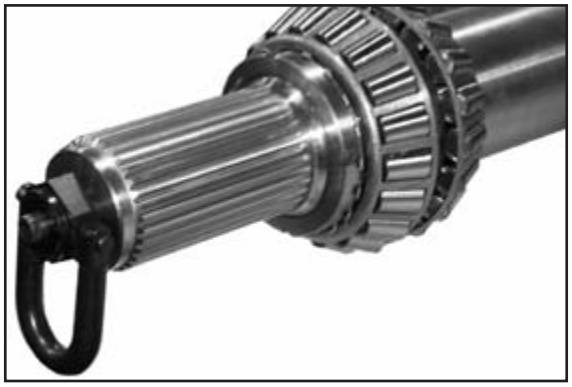

Figure 65. Eye Bolt Installed on Propeller Shaft.

6. Install the assembled propeller shaft into the thrust tube by inserting the shaft (rear end first) into the forward end of the thrust tube. Take care not to damage the bearings or races while inserting the shaft into the housing. The inner thrust bearing cup must be firmly seated in the bore and against the housing shoulder.

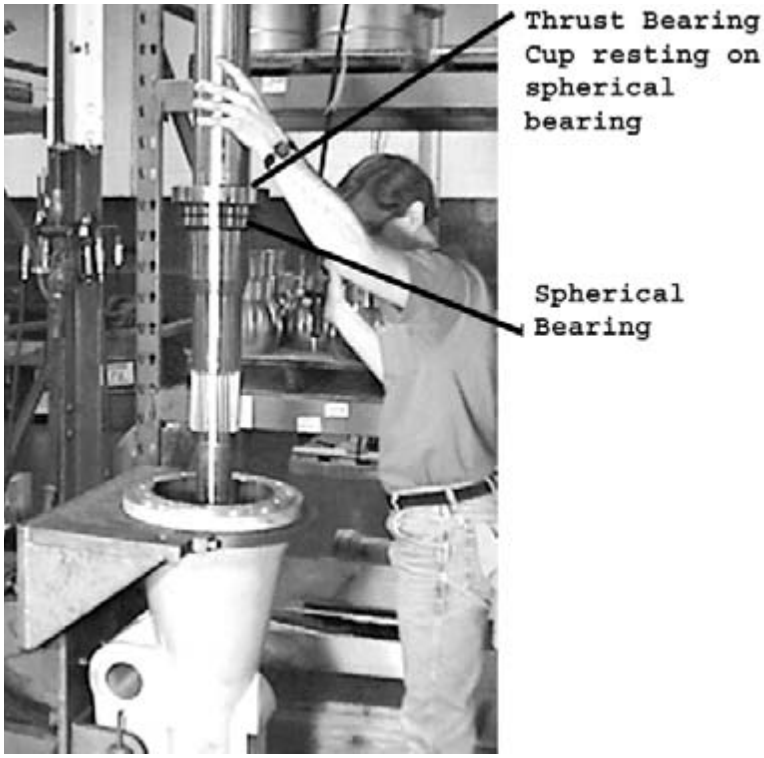

Figure 66. Lower the Propeller Shaft Assembly, Seat the Shaft In the Bearing Race

Figure 67. Seat the Shaft In the Bearing Race

7. Raise the shaft approximately 0.076 mm (0.030 in) to ensure that there will be end play between the thrust bearings. Install the frozen front outer thrust bearing cup into the thrust tube. Keep the shaft raised until the forward (outer) bearing cup warms to room temperature and stays in place when the shaft is lowered.

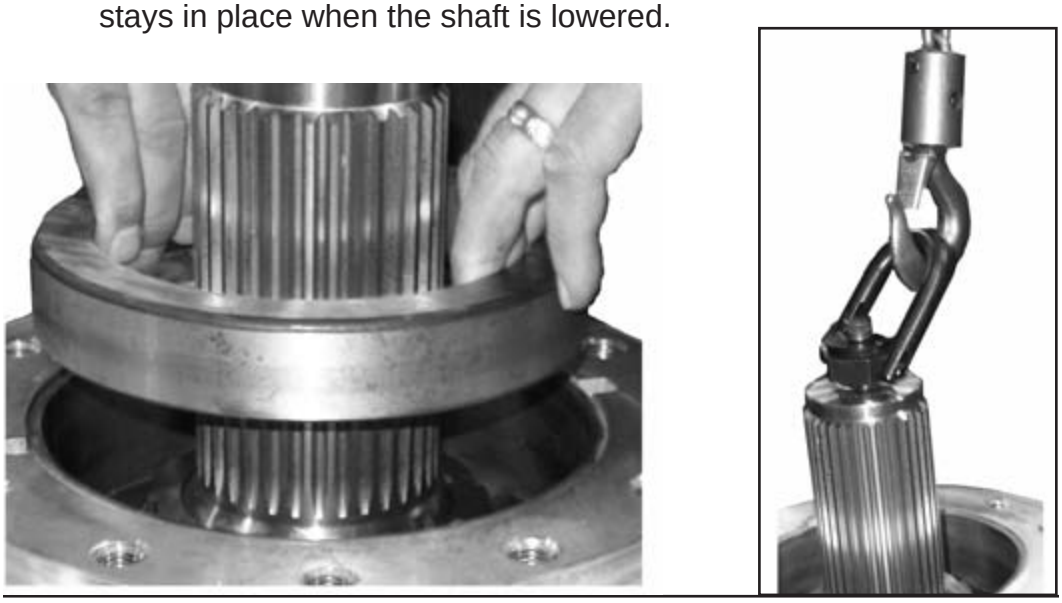

Figure 68. Install the Chilled Forward Thrust Bearing Cup, Raise the Shaft to Ensure End Play

8. Raise the thrust ball, using a hoist and Special Tool T-22031-5. Install the thrust ball onto the thrust tube. Secure the thrust ball using four 3/4-10 x 2.25 socket head capscrews, evenly spaced. Torque the capscrews to 170 N-m (125 ft-lbs).

9. Turn the thrust tube assembly over so that the output end is facing up. Install a dial indicator using special tool T-18050-746 onto the prop shaft.

Figure 69. Lower Ball, Secure with Four Capscrews

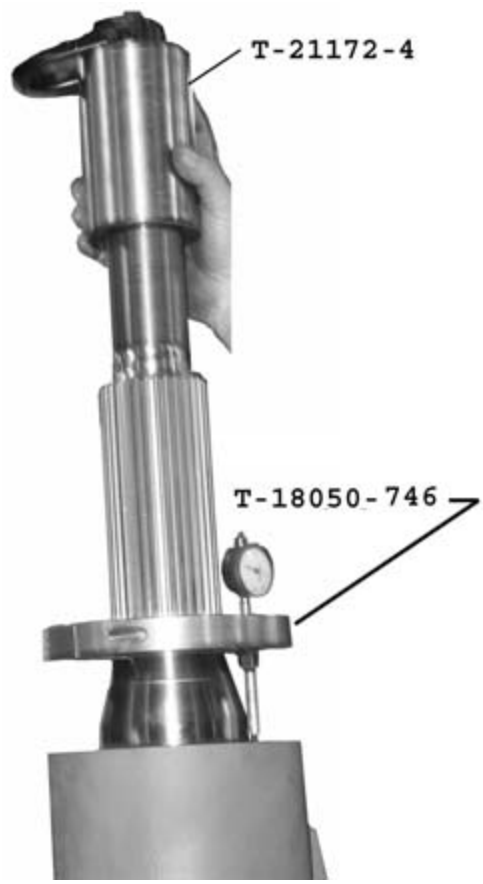

Figure 70. Turn Over and Install Dial Indicator T-18050-746

10. Use a hoist and the special tool T-21172-4 to lift up on the prop shaft with a force of approximately 300 lbs. Be sure that the roll-over stand is securely attached to the floor and can stand an upward force of 300 lbs. Rotate the shaft several turns and zero the dial indicator. Mark the angular location of the indicator stem on the housing. Lower the prop shaft , rotate several turns, stopping on the mark, and read the indicator. The clearance must be 0.51 mm to 0.127 mm (.002 in to .005 in). If the indicated reading is out of tolerance, turn the thrust tube over so that the forward end of the tube is facing up. Remove the thrust ball and add the required amount of shims to the top of the front bearing cup to reduce the bearing clearance into tolerance.

11. Repeat Step 10 until the bearing clearance is within tolerance. The correct bearing end play is extremely important to the proper operation of the ASD16.

12. Once the proper bearing end play is verified, turn the thrust tube with the thrust ball up, and remove the thrust ball. Grease the two o-rings with water-resistant lithium grease and install one in the groove located to the outside of the bolt holes on the face of the thrust tube housing and the other in the groove in the thrust ball. Install the isolator onto the thrust tube. The grease must hold the o-ring in place during assembly. Place the isolator on the thrust tube over the o-ring.

13. Clean the threaded holes with denatured alcohol to prepare for Loctite 242 blue or similar liquid thread locker. Lower the thrust ball onto the thrust tube, taking care that the o-rings and isolator remain in the proper location. The fill/vent plug in the thrust ball must be located at the top of the thrust tube. This is opposite the fin mounting surface.

Figure 71. O-ring On Thrust Tube, Use Grease to Hold O-ring in Thrust Ball Groove

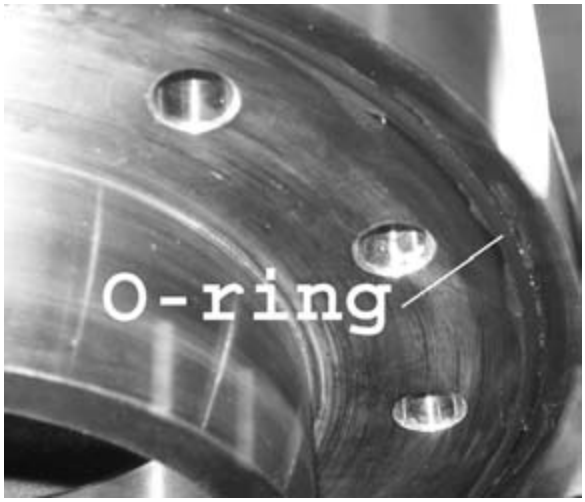

Figure 72. O-ring On Thrust Tube, Use Grease to Hold O-ring in Thrust Ball Groove

Figure 73. Place Isolator Over Thrust Tube, Lower Thrust Ball Onto Thrust Tube

Figure 74. Place Isolator Over Thrust Tube, Lower Thrust Ball Onto Thrust Tube

14. Coat the clean capscrew threads with Loctite 242 blue or similar liquid thread locker and install the twelve 3/4-10 x 2.25 twelve-point capscrews. Torque the capscrews to 170 N-m (125 ft-lbs).

Figure 75. Install Capscrews to Secure Ball to Thrust Tube

Mechanical Face Seal Installation

1. Turn the thrust tube over so that the rear end is facing up.

Figure 76. View of seal cavity

CAUTION

The ceramic carbide seal faces are extremely fragile and will easily crack or chip when dropped or when subjected to impact.
Always place the carbide seal parts face down on a soft, flat, non-abrasive surface, and in a safe location when not being handled.

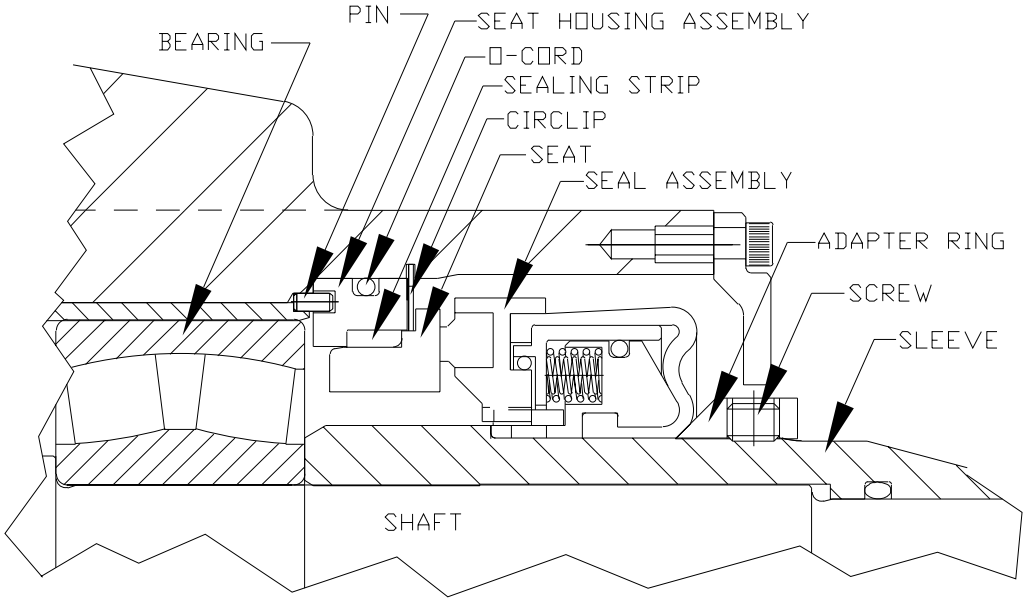

Figure 77. Arrangement for Drive Assemblies 1018684, 1007027A, and similar drives having mechanical seal mounted on sleeve

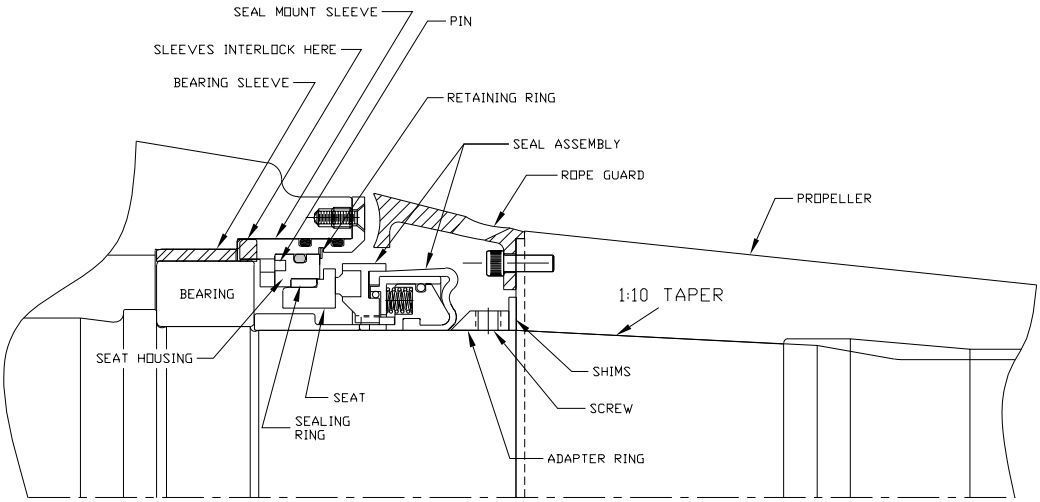

Figure 78. Seal Arrangement for Drive Assemblies 1020764, 1021360, and similar drives having mechanical seal mounted directly on the shaft

2. **Drives with seal seat housing mounted directly in the thrust tube:** Refer to the sketches for the following dimensions. Measure and record dimension A from the end of the thrust tube to the seal shoulder. This dimension should be about 72.6 mm (2.86 in).

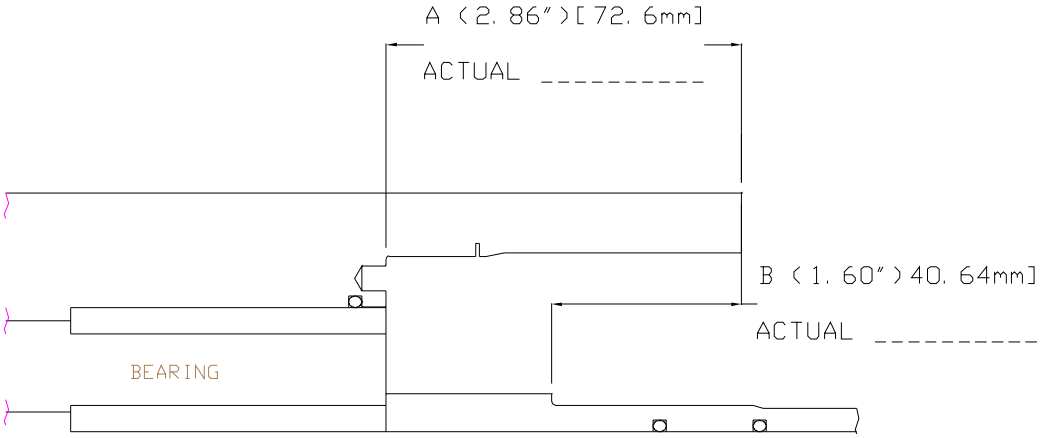

Figure 79. Measure dimension A and B

3. Measure and record dimension B from the end of the thrust tube to the sleeve shoulder.

4. Subtract B from A. This is the “setting dimension” and should be 1.264 +/- 0.026 inches. If the setting dimension deviates from this value, contact Twin Disc.

   Drives with the seal seat housing mounted in a separate, flanged “seal mount sleeve”: Refer to the sketches for the following dimensions. Measure and record dimension A from the end face of the seal mount sleeve to aft face of the “seal positioning sleeve”. Subtract this dimension from 1.344 in. This is the “setting dimension” and should be 1.264 +/- .026 in.

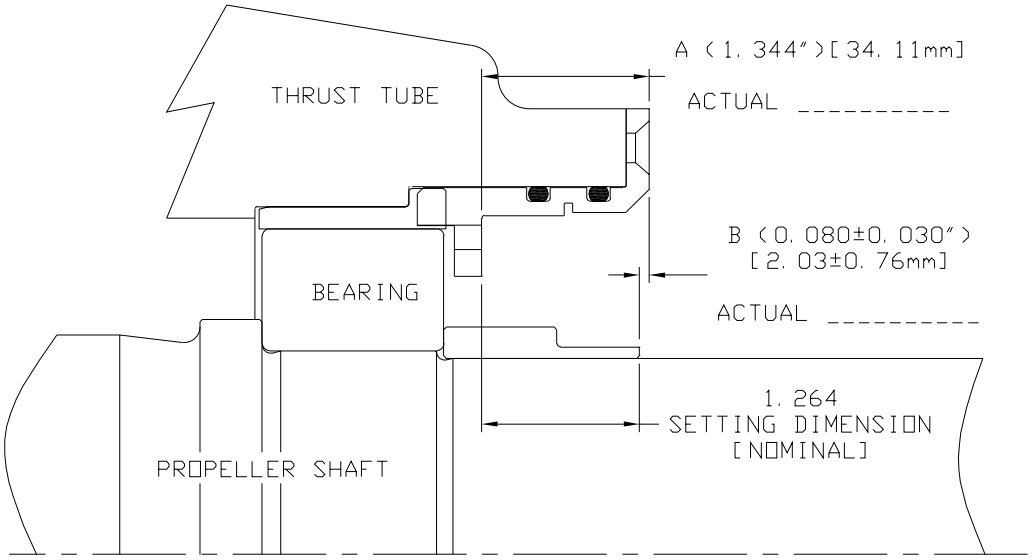

Figure 80. Measure dimension A

All Drives:

5. On the workbench, install the sealing strip into the seal seat housing.

6. Apply a soapy solution to the sealing strip and the seat, and install the seat into the seal seat housing and strip. Push the seat evenly and firmly into the housing until it seats on the strip.

7. Measure and record dimension C, the height of the seat and housing assembly in several locations. Be sure that the seat is fully installed before measuring.

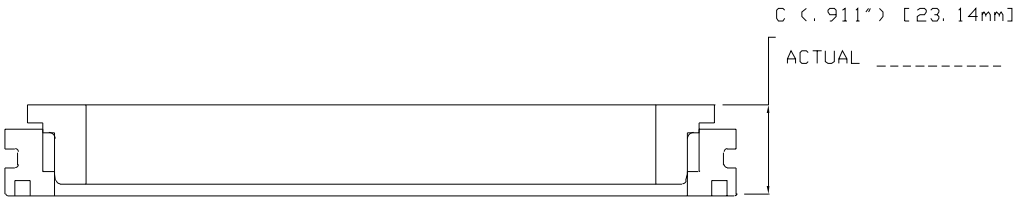

Figure 81. Measure dimension C

8. Remove the seat from the seal seat housing but leave the sealing strip in the housing assembly.

9. **Drives with seal seat housing mounted directly in the thrust tube:** Lightly oil the interior surface of the thrust tube. With a pencil, mark the hole location on the end of the thrust tube housing. Install the o-ring on the o.d. of the seal seat housing. Install the seal seat housing with o-ring into the thrust tube using tool T-18050-643, while making sure that the locator dowel pin aligns with and enters the hole. Install the retaining circlip.

   Drives with the seal seat housing mounted in a separate, flanged "seal mount sleeve": Ensure that the seal mount sleeve is installed within the thrust tube. Then assemble the seal seat as described above.

   Note: The seal mount sleeve contains an unevenly spaced bolt hole pattern and also a key pattern on its forward end that allow it to be installed only in the correct angular position.

   Note: If the offset bolt pattern on the seal mount sleeve matches the thrust tube holes and the sleeve cannot be fully inserted, remove the sleeve and check that key pattern on the seal mount sleeve matches that key pattern on the propeller bearing sleeve. The narrower of the four keys on the propeller bearing sleeve should be at the top. If it is not, then the propeller bearing sleeve must be re-installed in the correct angular location.

Figure 82. Mark pin location.

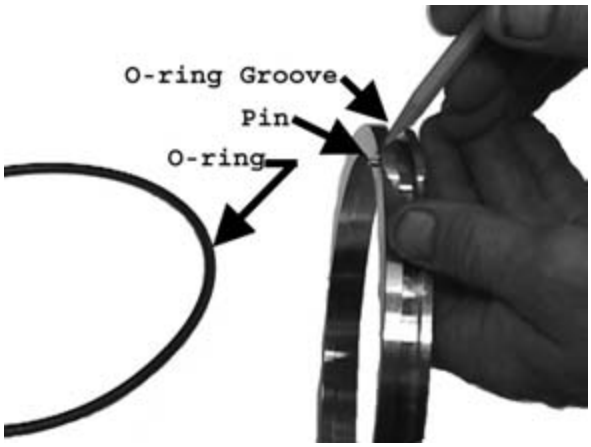

Figure 83. Install o-ring.

Figure 84. Install with Tool T-18050-643.

10. Clean the forward seat face with alcohol or lacquer thinner. The face must be completely free of debris and dirt. Apply a light film of very light oil to the seat face. Apply a soapy solution (one part water to one part liquid dishwashing detergent) to the sealing strip and to the mating diameter of the forward seat and install the seat with tool T-21549-17. Be sure to keep the contact surfaces of the tool clean.

Figure 85. Install circlip.

Figure 86. Lubricate seat.

Figure 87. Install seat with tool T-21549-17

11. **<u>Drives with seal seat housing mounted directly in the thrust tube:</u>** Measure and record dimension D, the distance from the end of the thrust tube to the forward seat face in several angular locations. This dimension should be about 1.965 in.

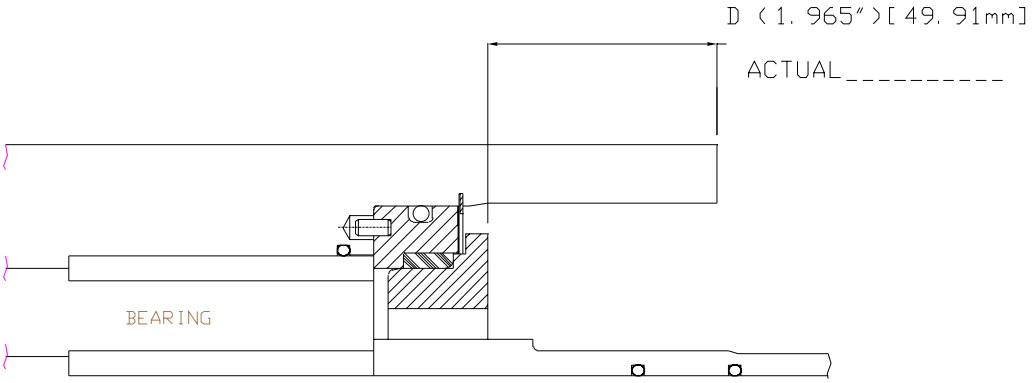

Figure 88. Measure dimension D

<u>Drives with the seal seat housing mounted in a separate, flanged "seal mount sleeve":</u> Measure and record dimension D the distance from the end face of the seal mount sleeve to the forward seat face in several angular locations. This dimension should be about 0.432 in.

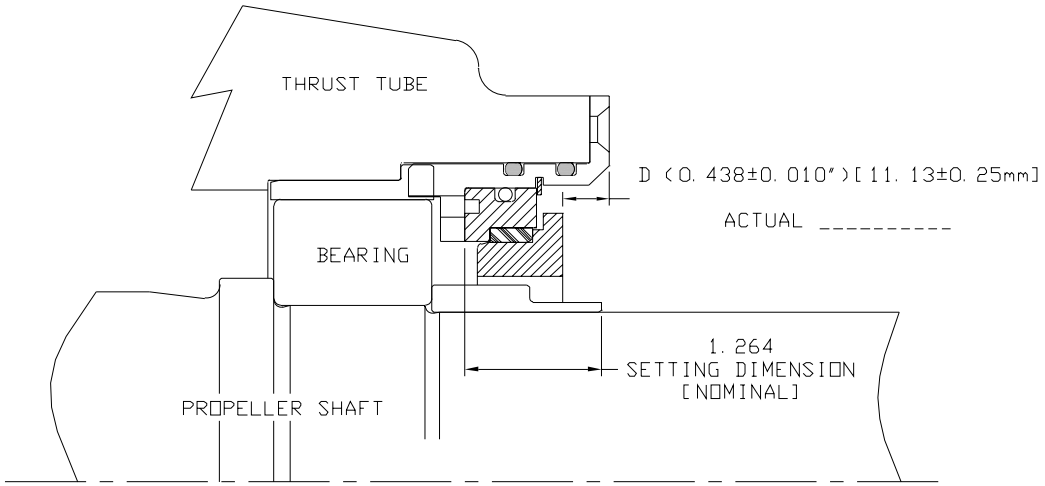

Figure 89. Measure dimension D

12. Subtract dimension D from dimension A and record the result. The result should be about 0.895 in. or the same as dimension C.

13. Clean the seat face of the rotating seal assembly with alcohol or lacquer thinner. Ensure that the entire rotating assembly is clean.

14. Coat the inside diameter of the rotating assembly and also the shaft or shaft sleeve with the recommended soapy solution.

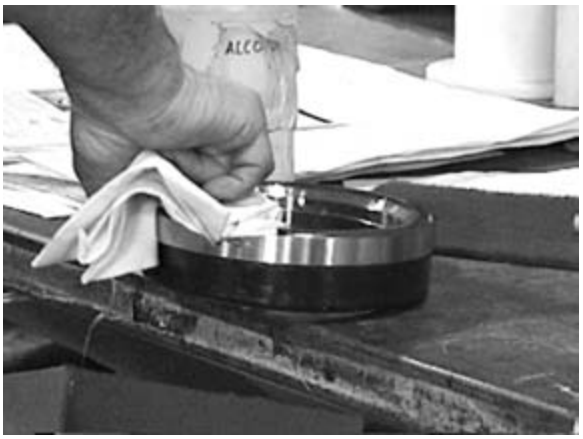

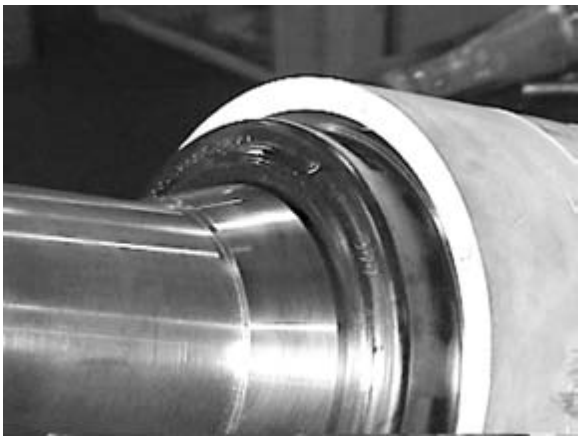

Figure 90. Clean seal assembly and install by hand.

15. Carefully place the rotating assembly onto the shaft or shaft sleeve and push forward carefully and gently by hand until the high end of the taper is visible. Install the abutment ring over the shaft with the tapered end toward the seal. Do not attempt to push it fully into place by hand. Attach a dial indicator to tool T-18050-642 and position the tool and propeller nut behind the seal assembly.

Note: Make sure that the radial holes in the adapting ring (also called abutment ring) are not over previously drilled dimples in the sleeve.

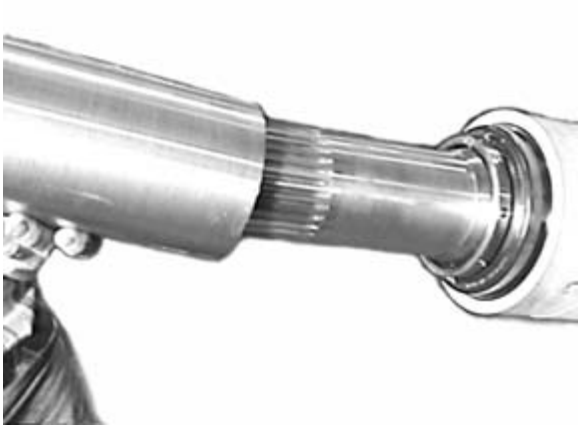

Figure 91. Install special tool T-18050-642.

Figure 92. Tighten prop nut.

16. Push the seal assembly until the aft face of the adapter ring is about 25.4 mm (1.0 in.) from the end of the thrust tube (57.15 mm [2.25 in.] on drives equipped with the seal mounting sleeve). Continue slowly, while oscillating the shaft a few degrees in each direction by hand until a squealing sound can be heard, indicating that the seal faces have just touched. Measure dimension E from the aft edge of the thrust tube to the aft edge of the abutment ring. It should be about 22.6 mm (0.89 in.) on drives equipped with the seal mounting sleeve and 61.7 mm (2.43 in.) on units without the seal mounting sleeve.

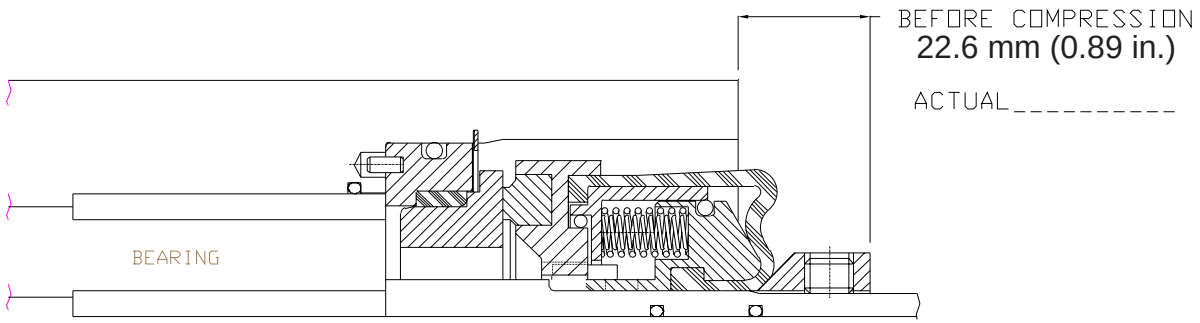

Figure 93. Measure dimension E

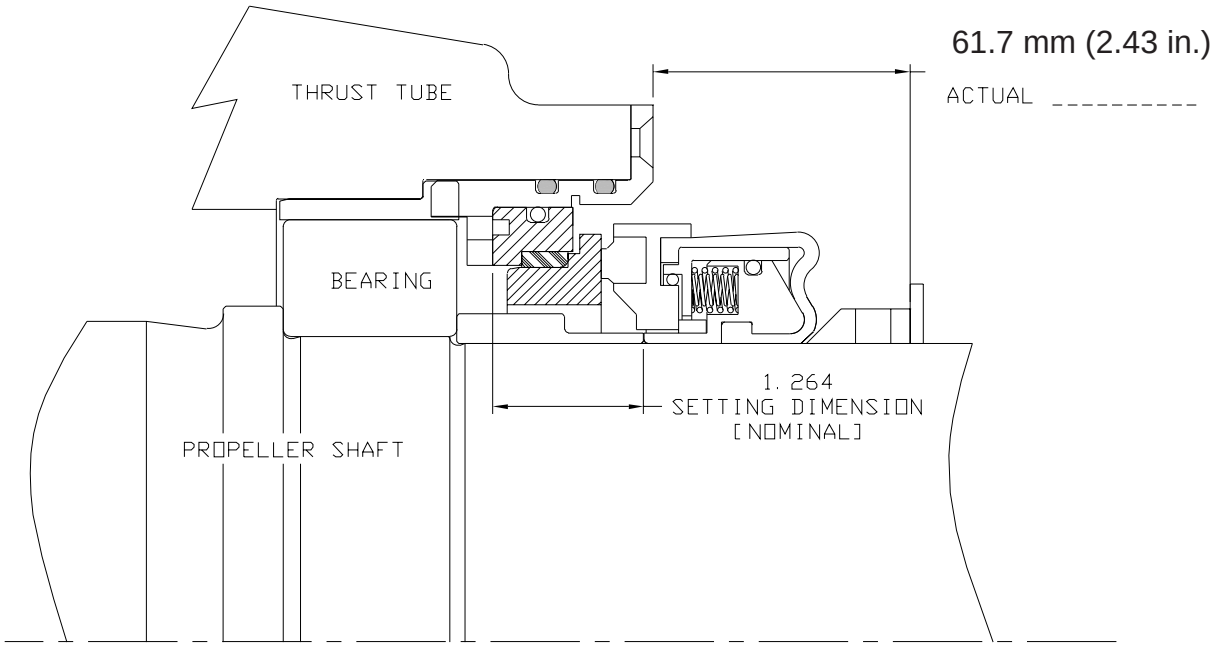

Figure 94. Measure dimension E

17. Zero the dial indicator, and push the rotating assembly as far as it will go forward. When the indicator stops moving, tighten the propeller nut 10 to 15 degrees more. Measure and record dimension F, the distance between the aft edge of the adapter ring and the aft edge of the thrust tube. This dimension should be about 0.540 in. (On drives where the seal is installed in a seal mounting sleeve, this dimension should be about 2.1 in.). The total travel of the seal from the contact point to the fully installed position should be about 0.346 in.

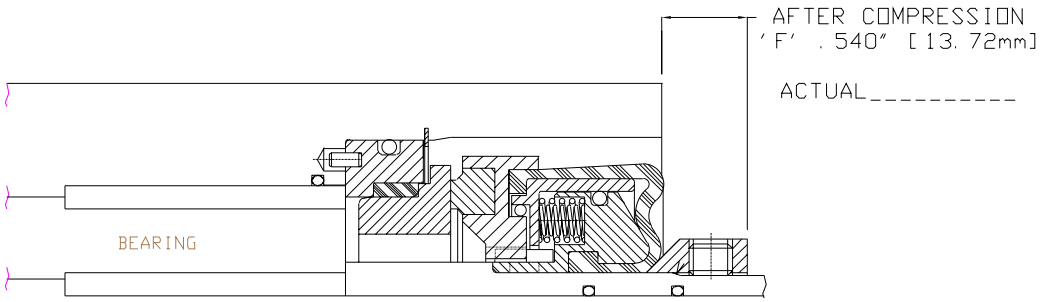

Figure 95. Measure dimension F

Note: The dimensions A through F are check dimensions to assure the parts are properly assembled, not to set the value of the seal compression.

18. Install all 8 setscrews into the adapter ring, torque them to 10.85 N-m (8 ft-lbs), and remove the installation tools.

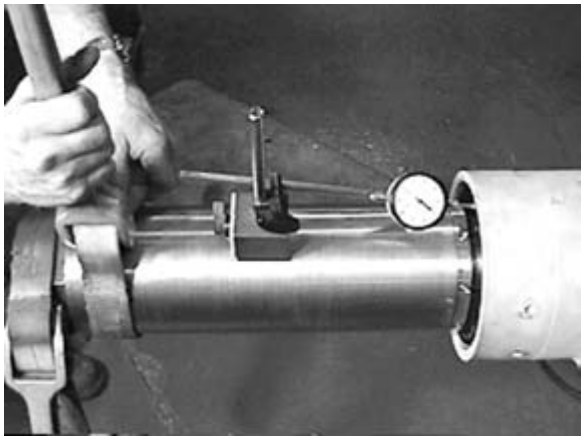

Figure 96. Compress seal with propeller nut.

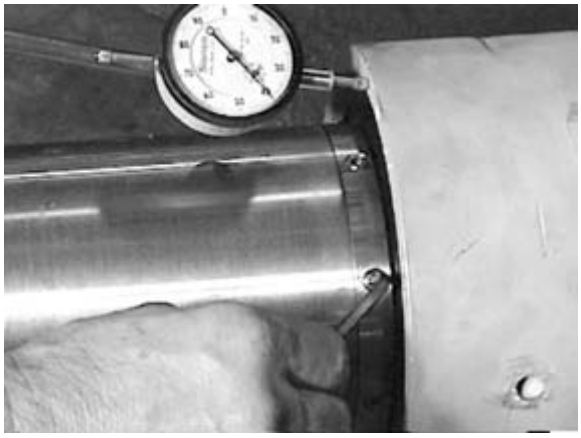

Figure 97. Tighten set screws.

⚠ CAUTION

The next operation will produce metal chips that are harmful to the seal. STEPS 19 THROUGH 25 MUST NOT BE PERFORMED on drives that have the seal mounted directly on the shaft (Assemblies 1020763, 1021360, and similar drives). DO NOT UNDER ANY CIRCUMSTANCES ATTEMPT TO DRILL ANY HOLES OR OTHERWISE MACHINE THE PROPELLER SHAFT. *THIS WILL VOID THE WARRANTY.*

Note: Paragraphs 19 through 25 pertain to drives that have a sleeve-mounted mechanical seal" (1007027A, 1018347, 1018684 and similar designs)

19. Pack the seal cavity with cloth to keep the chips from entering the seal cavity.

20. Remove one setscrew, and replace with Special Tool T-18050-783 (drill bushing). Tighten the bushing firmly but do not over tighten.

21. Using a size G drill (0.261 in or 6.6 mm), spot a dimple in the sleeve through the bushing. The depth of cut should be to allow the full point of the drill to penetrate the surface.

22. Remove the drill bushing and blow out all chips and debris from the threaded hole.

23. Clean the threaded hole with denatured alcohol to prepare for Loctite 242 blue or similar liquid thread locker. Coat the clean setscrew threads with Loctite 242 blue or similar liquid thread locker and install the setscrew. Torque to 10.8 N-m (8 ft-lbs).

24. Repeat steps 33 through 36 for the other seven setscrew holes. Remove the packing cloth and clean any remaining foreign material from the seal.

25. Re-check dimension F from step 17. If the adapter ring has moved aft more than 0.381 mm (0.015 in) as a result of the spot-drilling operation, disassemble the ring and repeat the spot-drilling with the ring rotated a few degrees to avoid the previously drilled locations.

Figure 98. Rear view with seal installed.

Figure 99. Cover installed

26. Install the rear cover (rope guard) onto the rear of the thrust tube housing. Clean the threaded holes with denatured alcohol to prepare for Loctite 242 blue or similar liquid thread locker. Coat the clean capscrew threads with Loctite 242 blue or similar liquid thread locker and install eight 10-24 x 5/8 socket head capscrews. Torque the capscrews to 30 N-cm (24 in-lbs).

    Drives with the seal seat housing mounted in a separate, flanged "seal mount sleeve" (Assemblies 1020763, 1021360, and later): The rope guard on these drives is mounted on the propeller rather than the thrust tube. When not installing the propeller immediately on these drives, protect the exposed seal with a shipping cover, P/N 1021042 or other suitable protection. Leave the shipping cover in place until just prior to installing the propeller.

27. Spin the propeller shaft by hand to assure smooth operation. The shaft should spin smoothly, but there should be resistance due to the seal. If the seal is installed properly, it should require two hands to spin the shaft with significant effort.

Thrust (Input) Shaft and Socket Assembly

1. Heat the two (2) tapered roller bearings and the input shaft seal wear sleeve to 121˚C (250˚F).

2. Freeze the two (2) bearing cups to -29˚C (-20˚F).

3. Place the spacer on the output (aft) end of the shaft its flat end facing the end of the shaft. Assemble the previously heated tapered roller bearing cones onto the appropriate end of the input shaft with the smaller diameter of the bearings toward the spline ends of the shaft. The larger of the two bearings must be assembled to the aft end of the shaft against the spacer. Be sure to seat the bearings against the shoulder of the shaft as they cool. Install the input shaft seal wear sleeve on the input shaft using Special Tool T-18050-644. The concave end of the wear sleeve must face the shaft's shoulder.

4. Install the output (aft) end chilled bearing cup into the bearing sleeve with the thick end of the cup toward the bottom (flange end) of the sleeve.

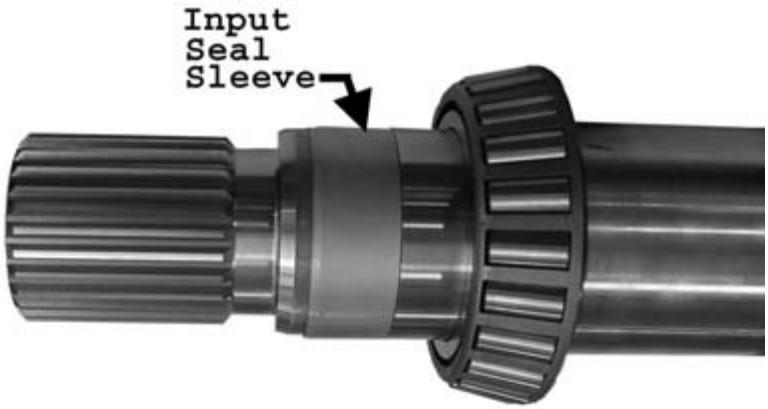

Figure 100. Install the input end bearing and wear sleeve.

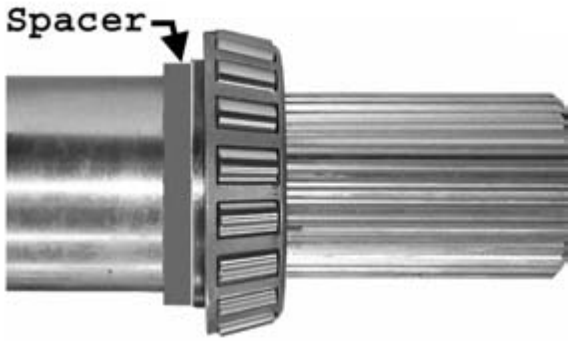

Figure 101. Install the output end spacer and bearing.

Figure 102. Install the frozen cup in the sleeve.

5. Clamp the U-joint's H-shaped center coupling in a vise. The U-joint should be positioned so it looks like an H on its side, with the bottom leg of the H in a vise.

6. **Assemblies 1018684, 1007027A, and earlier drives with the u-joint attached to the input shaft with three axial screws:** Place the bearing sleeve with the bearing cup over the output end of the shaft. Place the spacer over the spline with its concave end against the bearing. Cradle the input shaft with a hoist, and insert the spline into either u-joint yoke.

   Note: Aligning the shaft with one of the capscrew holes at the six o'clock position prior to inserting the spline into the u-joint yoke will allow the upper two capscrews to be inserted more easily.

7. Place the retainer plate in the yoke, and install the upper two capscrews and lock washers. Lift the shaft end, and install the lower capscrew and lock washer. Torque the capscrews to 122 N-m (90 ft-lbs).

Figure 103. Slide Shaft Into Spline.

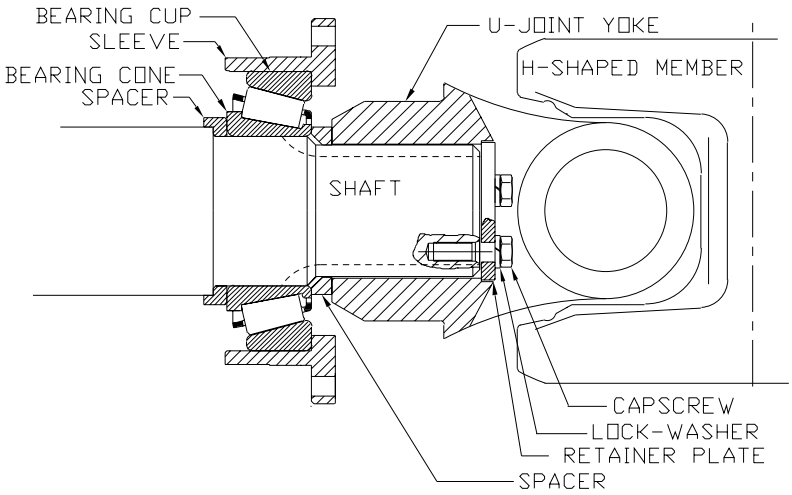

Figure 104. Install Retainer, Capscrews & Washers.

8. Support the socket housing with the large opening facing up. If necessary, heat the outside of the socket (small diameter end) section with a butane or propane torch to assist in the installation of the forward bearing cup. Do not allow the temperature of the housing to exceed 93˚C (200˚F). Install the chilled bearing cup into the housing with the thin end up.

9. Insert two guide screws (1/2-13) into two of the threaded holes that will be used to align the bearing sleeve and its shims. Place approximately 1.3 mm (0.050 in) thickness of bearing shims into the thrust socket. This ensures that initially there will be end play on the bearing set.

Figure 105. Install Chilled Bearing Cup

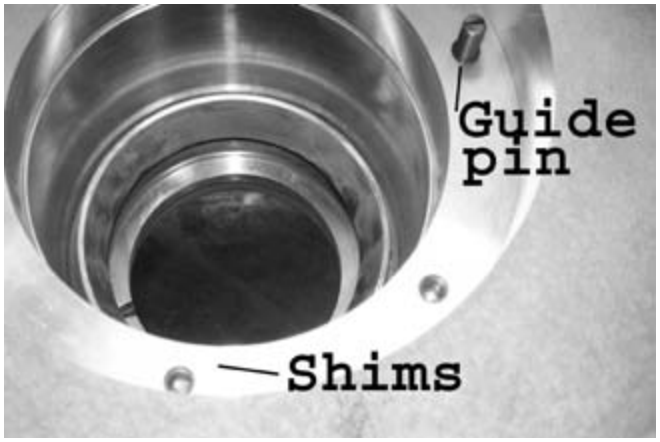

Figure 106. Insert Guide Pins and Starting Shim Pack

10. Use a hoist to suspend the input shaft and U-joint assembly above the socket. Lubricate the bearings with oil. Lower the assembly into the thrust socket until seated in the forward tapered roller bearing cup.

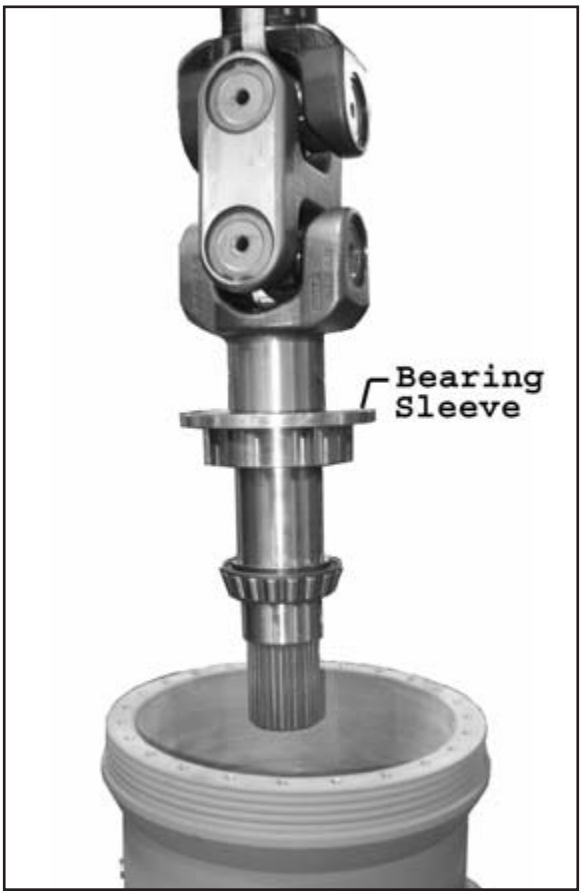

Figure 107. Lubricate Bearing and Lower the Input Shaft Assembly Into Housing

11. Install four 1/2-13 x 1.75 twelve point capscrews to retain the bearing sleeve. Torque to 68 N-m (50 ft-lbs).

12. Turn the thrust socket over so that the input end (small diameter end) is facing up, and attach a dial indicator and the special tool T-18050-747 to the forward end of the input shaft.

13. Install a swivel eyebolt into the input end of the shaft. Rotate the shaft several turns, and zero the indicator. Mark the angular location of the indicator stem on the socket. Use a hoist to lift on the input end of the shaft, rotate several turns while lifting, stop with the indicator stem on the mark, and note the end play reading on the indicator. The indicated end play should be larger than 0.05 mm (0.002 in). The desired final end play is 0.05 mm to 0.127 mm (0.002 in. to 0.005 in). Turn the assembly over with the large end up.

Figure 108. Install Four Capscrews to Retain Sleeve, Turn Over and Measure End Play

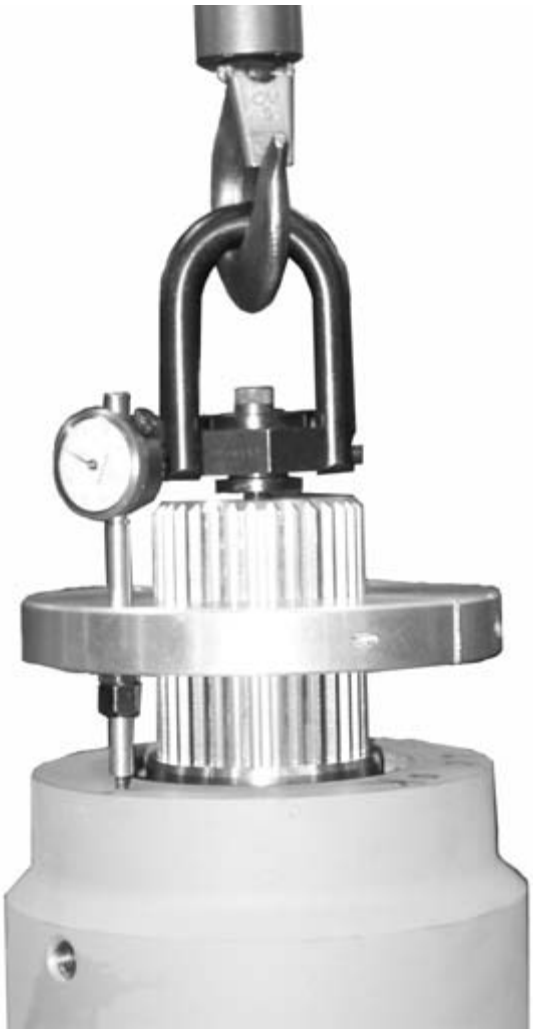

Figure 109. Install Four Capscrews to Retain Sleeve, Turn Over and Measure End Play

14. Remove or add shims between the housing and the bearing sleeve to adjust the bearing clearance, and repeat steps 12 through 14 until the shaft end play is within tolerance. Shims must be removed (not added) to reduce end play.

15. Remove the guide studs, and install the remaining 1/2-13 x 1.75 twelve point capscrews and torque to 68 N-m (50 ft-lbs). Rotate the shaft by hand to assure smooth operation and recheck the final end play.

16. Turn the assembly over with the input shaft up.

17. Press the input seals back to back into the seal carrier. Install the retaining snap rings. Place the o-ring in the groove on the o.d. of the carrier.

18. Coat the seals and o-ring with marine grade grease, and insert the seal carrier with seals into the thrust socket, aligning the slot on the inner face of the carrier with the dowel pin that is located on the shoulder of the bearing sleeve. Install the snap ring

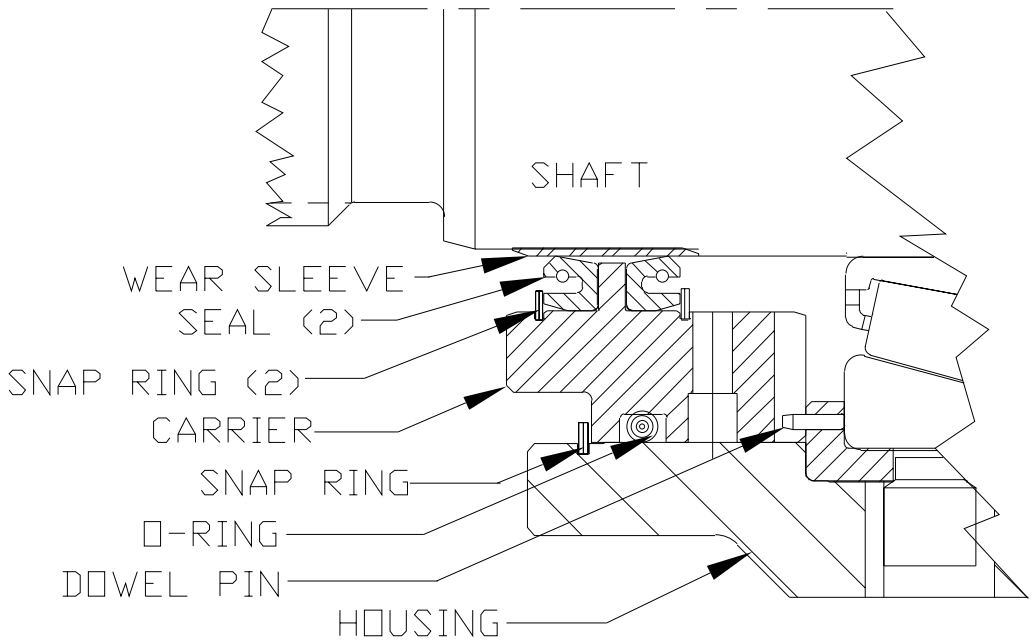

Figure 110. Install the seals into the carrier, and install the carrier into the housing

Assembly of Thrust Tube and Ball Into Thrust Socket

Note: If the Thrust Socket was left attached to the transom of the vessel, please see the section following this one for complete instructions and assembly procedures.

Assembly with the Socket Removed from the Transom

Note: Inspect the packings and the o-ring for damage. Replace, the packing if there is any doubt as the packing and o-ring prevent water ingression into the socket of the Arneson Surface Drive. If replacement is not necessary, proceed to **step # 4**. If they are being replaced, remove the old packing and o-ring, discard, and clean and lubricate the socket and retainer.

Note: Support the socket assembly securely with the larger diameter end facing up. Coat the U-joint yoke splines with gear oil to assist in the installation of the yoke onto the propeller shaft.

Note: The forward and aft edges of the forward retainer are manufactured with as sharp an edge as practical to assist in excluding dirt and debris from the spherical bearing surface. Protect these edges from even the slightest dent or scratch. Accidental damage to these edges must be smoothed by hand-working with a machinist's scraping tool, files, and emery cloth. Restore the spherical surface if it is locally deformed.

1. Place the forward retainer into the socket housing. Make sure that the anti-rotation pins are aligned with the notches in the socket housing and that the retainer is seated firmly against the shoulder in the socket. Be sure to carefully inspect the retainer for damage prior to installing it.

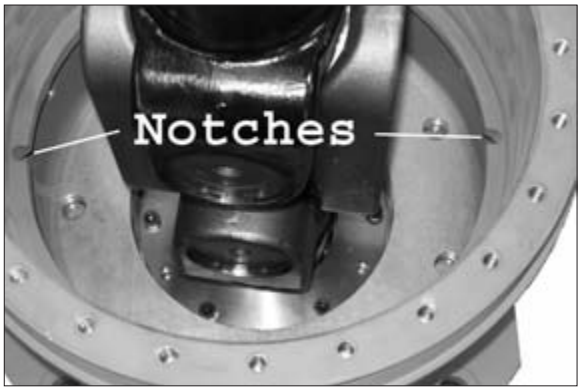

Figure 111. Notches In the Socket

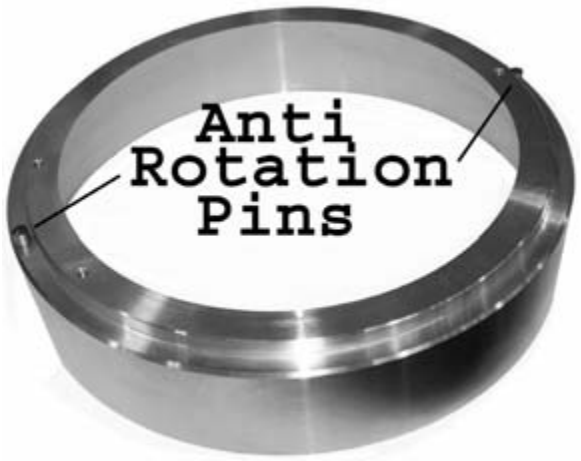

Figure 112. Anti Rotation Pins In the Retainer

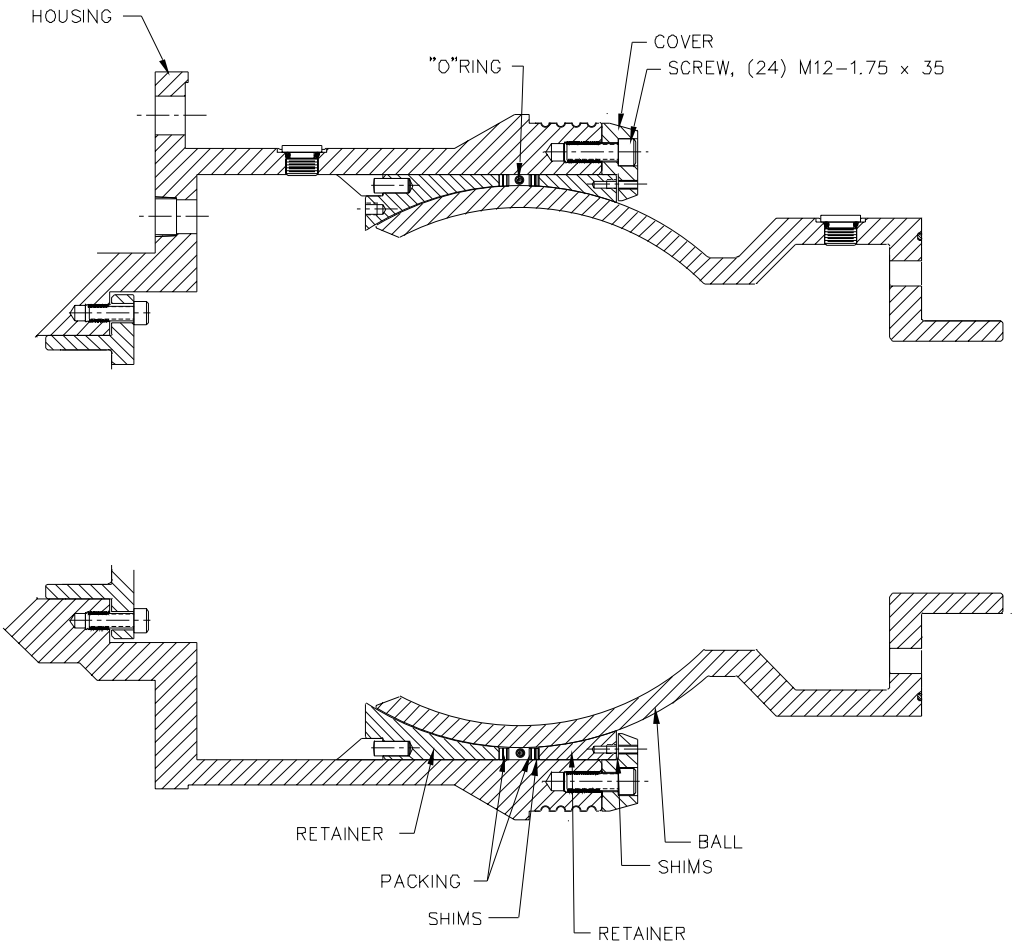

Figure 113. Ball and Socket Parts Identification

2. Install the first packing on top of the retainer, working it smoothly into place. If bulk packing is used, cut two pieces 1391 mm (54.75 in) with the ends cut at a 45 degree angle. The split line should be at either the 10:00 o'clock or the 2:00 o'clock position, using the flat on the socket housing's external mounting flange as the 6:00 o'clock position. Place an o-ring over the packing.

3. Install the second packing on top of the o-ring, working it smoothly into place. This split line should be at either the 2:00 o'clock position or the 10:00 o'clock position that was not used for the first packing above. Shims will be added on top of the packing **after** the rear (output end) retainer is properly shimmed.

Figure 114. Install Packing

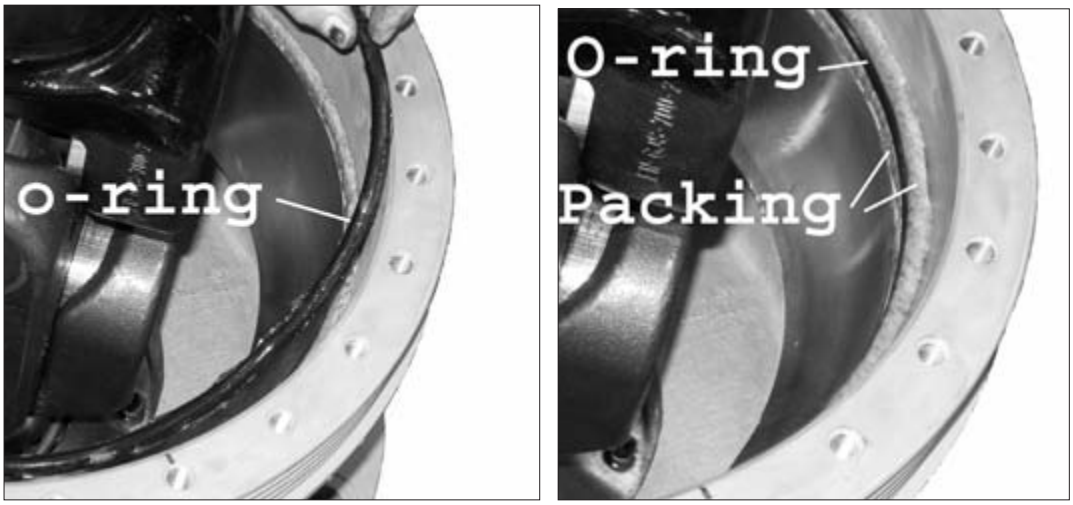

Figure 115. Followed by O-ring and Second Packing

4. Place the rear (output end) retainer (wear sleeve) and approximately 5.08 mm (0.200 in) of the shims over the thrust tube assembly. Place the cover over the thrust tube. Apply a light coat of grease on the entire surface of the thrust ball.

5. Place a swivel eyebolt and tool T-21567 onto the output end of the propeller shaft. Lift the thrust tube assembly and position above the thrust socket. Make sure the u-joint spline is vertical. Ease the thrust tube into the socket making sure that the propeller shaft spline enters the spline of the u-joint. While lowering, align the flat on the socket with the flat bolting surface of the thrust tube.

6. Install the rear (output end) retainer (wear sleeve) into the socket.

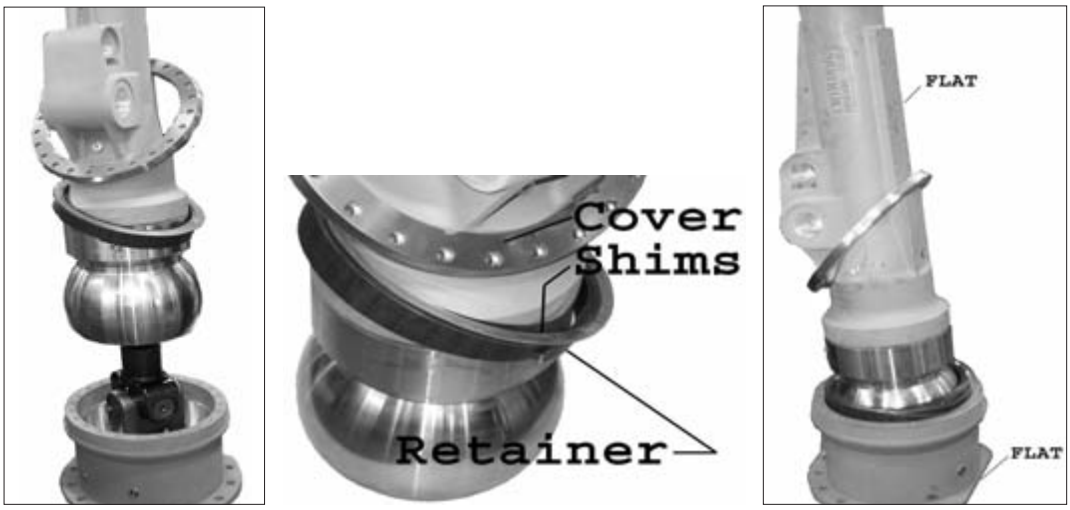

Figure 116. Insert Prop Shaft Into U-joint, Align Flat (for fin) with Flat On Housing

7. Place the shims on the top of the rear (output end) retainer (wear sleeve). The rear retainer (wear sleeve) will be deliberately over-shimmed.

8. Install the cover onto the socket assembly. There will be a gap between the socket housing and the cover.

Note: Retainer covers on drives with the larger thrust tube contain two notches on the inner circumference to provide clearance with the upper (trim cylinder attachment) boss. Align these notches with the sides of the upper (trim cylinder attachment) boss to clear the corners of the boss when lowering the cover over the thrust tube.

Handle the retainer cover slowly when passing it over the thrust tube so that the paint will not be damaged. If the paint is chipped or scraped off, retouch the affected locations.

9. Install every third 1/2-13 x 1.5 socket head capscrew, retaining the cover to the socket.

Figure 117. Place Shims On Retainer, Install Cover, Tighten Screws Evenly

10. Evenly tighten the capscrews while using a feeler gauge to obtain zero gap between the thrust ball and the rear retainer (wear sleeve). Once a zero clearance is achieved, the thrust tube should be tilted left, right, forward and back (a resistance to movement will be felt) to fully seat the ball. The thrust tube assembly should remain attached to the overhead hoist during this procedure as a safety measure.

⚠ WARNING

Do not allow the thrust ball to pivot against the edge of the installed retainer cover. If the thrust tube drops against the socket, damage may occur.

11. Move the thrust tube back to the vertical position and recheck for clearance between the thrust ball and rear retainer (wear sleeve). Remove shims, if necessary, to obtain zero clearance between the thrust ball and the rear retainer (wear sleeve).

Figure 118. Use Feeler Gauge and Obtain Zero Clearance Between Ball and Retainer

12. When zero clearance is obtained, measure the gap between the socket housing and the cover. The distance measured is equal to the thickness of the shims that must be removed from between the rear (output end) retainer and the cover to maintain the desired zero clearance between the ball and rear retainer (wear sleeve).

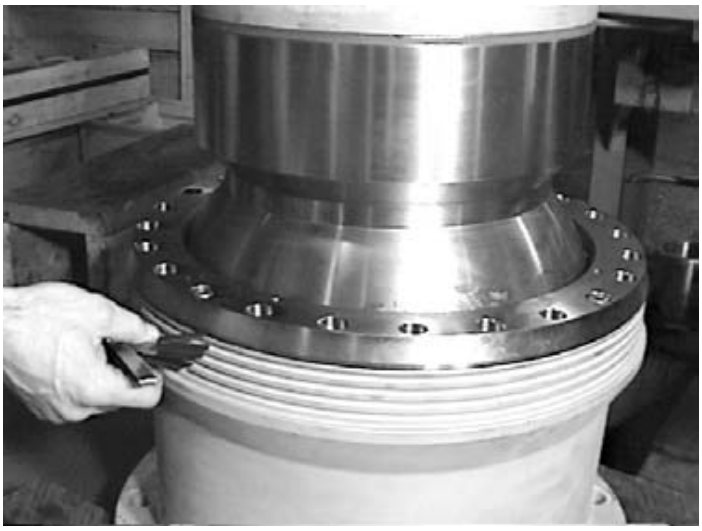

Figure 119. Use Feeler Gauge to Obtain Average Gap Between Cover and Housing

13. Remove the cover and remove the amount of shims equivalent to or the next size larger than the gap measured.

    Example: If the gap measured is 2.921 mm (0.115 in), remove 3.048 mm (0.120 in) in shims. This creates a slightly tight fit between the rear retainer (wear sleeve) and the ball. The rear retainer (wear sleeve) has now been shimmed properly to the ball.

    The retainer cover shim pack developed in these preceding steps must be installed into position in the thrust socket while adjusting the previously installed packing and o-ring. No further adjustment of the aft retainer-to-cover shims will be required.

    Note: The thrust ball is sealed to the thrust socket with the combination of two rope packings and an o-ring that were installed previously. To provide a tight seal, the packing and o-ring must be compressed by the rear retainer (wear sleeve) 1.25 mm ± 0.25 mm (0.050. ± .010 in). The amount of compression is adjusted with packing shims.

14. Raise the cover and the shim pack and hang them on the thrust tube. Remove the rear retainer (wear sleeve) and support it on the thrust tube.

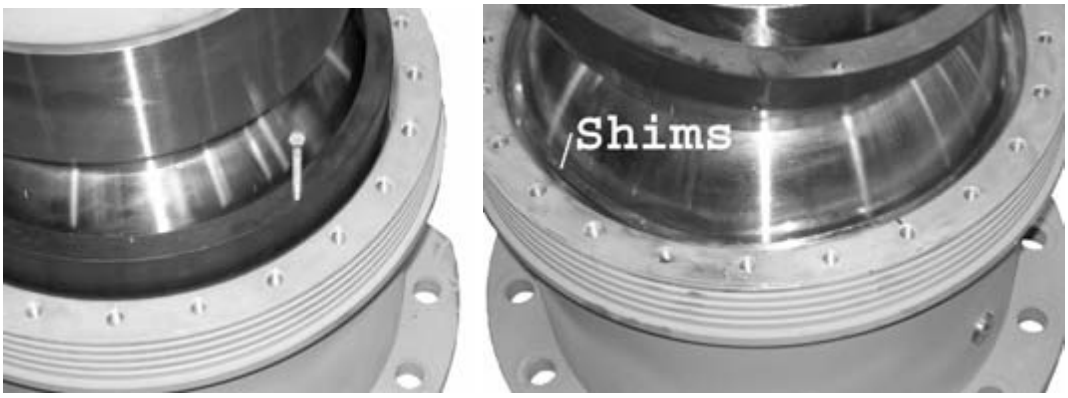

Figure 120. Remove the Retainer (wear sleeve), Install Packing Shim Pack

15. Install a shim pack of the packing shims measuring approximately 3.8 mm (0.150 in) in thickness. These are placed on top of the packing material. The packing will be deliberately over shimmed.

16. Install the rear retainer (wear sleeve) followed by the shim pack and cover. Install every third 1/2-13 x 1.5 socket head capscrew, retaining the cover to the socket. Evenly torque the screws to 34 N-m (25 ft-lbs).

17. Measure the gap between the thrust socket housing and the cover in several positions around the diameter of the thrust socket. Average these measurements and label this average as **A** (tight retainer bolts). Note that if there is no gap, more shims will need to be added on the packing material.

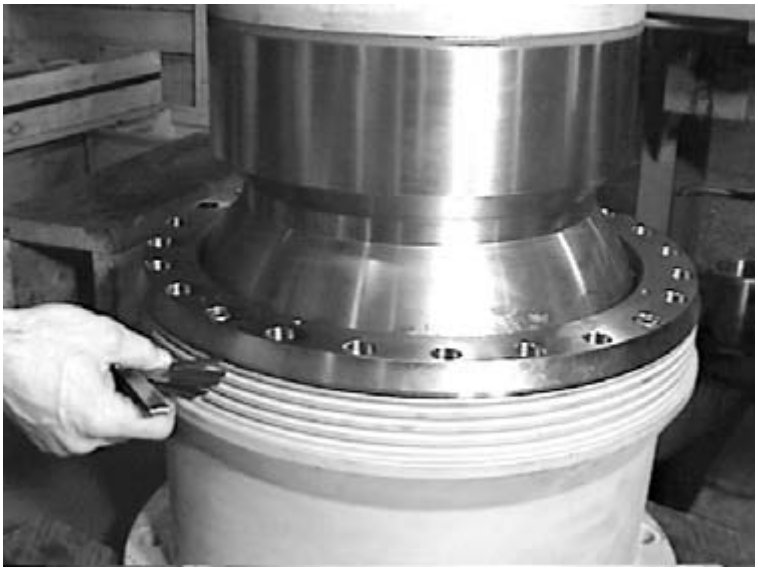

Figure 121. Use Feeler Gauge to Obtain Average Gap Between Cover and Housing - Gap A

18. Loosen the cover retaining screws, and allow the packing and o-ring to relax.

19. Measure the gap between the thrust socket housing and the cover in several positions around the diameter of the thrust socket. Average these measurements and label this average as **B** (loose retainer bolts).

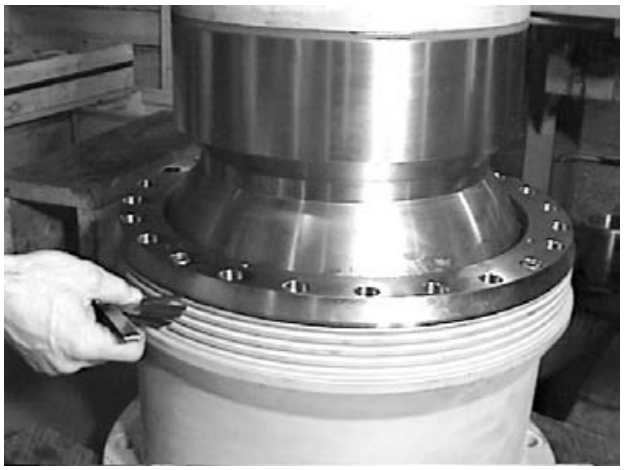

Figure 122. Use Feeler Gauge to Obtain Average Gap Between Cover and Housing - Gap B

20. Subtract A (tight retainer bolts) from **B** (loose retainer bolts). Record the difference as **C** (actual compression). **C** represents the actual compression that results from the packing and o-ring being compressed with 3.81 mm (0.150 in) thickness of packing shims.

21. Subtract the specified amount of compression 1.25 mm ± 0.25 mm (0.050 ± 0.010 in) from **C** (the actual compression). Record this new calculation as **D** (excess compression).

22. Add **A** (tight retainer bolts) to **D** (excess compression). The sum is equal to the thickness of packing shims that must be removed in order to compress the packing and o-ring to the desired amount of 1.25 mm ± 0.25 mm (0.050. ± .010 in.).

	Calculation:	Example:		
B	Loose Retainer bolts	2.80 mm	(0.110 in.)	
-A	Tight Retainer bolts	-0.75 mm	(0.030 in.)	
C	Actual Compression	2.03 mm	(0.080 in.)	
C	Actual Compression	2.03 mm	(0.080 in.)	
-( )	Specified Compression	-1.25 mm	+/- 0.25 mm	(0.050 in +/- 0.010 in.)
D	Excessive Compression	0.75 mm	+/- 0.25 mm	(0.030 in +/- 0.010 in.)
A	Tight Retainer bolts	0.75 mm	(0.030 in.)	
+D	Excessive Compression	0.75 mm	+/- 0.25 mm	(0.030 in +/- 0.010 in.)
	Thickness of packing shims to remove	1.50 mm	+/- 0.25 mm	(0.060 in +/- 0.010 in.)

Figure 123. Example of Packing Shim Calculation

23. Remove the cover, rear retainer (wear sleeve) shims, and rear retainer (wear sleeve). Remove the packing shims. Adjust the shim pack as calculated above, and reinstall shims over packing.

24. Install the rear retainer (wear sleeve), shims, and cover. Install 24 1/2-13 x 1.5 socket head capscrews and torque to 60 N-m (45 ft-lbs).

Assembly with Socket Attached to Transom

Note: Inspect the packings and the o-ring for damage. Replace, the packing if there is any doubt as the packing and o-ring prevent water ingression into the socket of the Arneson Surface Drive. If replacement is not necessary, proceed to **step # 4**. If they are being replaced, remove the old packing and o-ring, discard, and clean and lubricate the socket and retainer.

Note: The forward and aft edges of the forward retainer are manufactured with as sharp an edge as practical to assist in excluding dirt and debris from the spherical bearing surface. Protect these edges from even the slightest dent or scratch. Accidental damage to these edges must be smoothed by hand-working with a machinist's scraping tool, files, and emery cloth. Restore the spherical surface if it is locally deformed.

1. Place the forward retainer into the socket housing. Make sure that the anti-rotation pins are aligned with the notches in the socket housing and that the retainer is seated firmly against the shoulder in the socket.

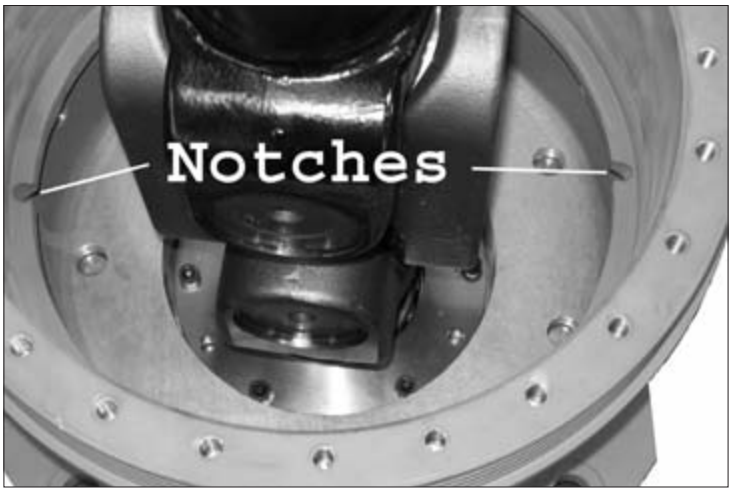

Figure 124. Notches In the Socket

Figure 125. Anti Rotation Pins In the Retainer

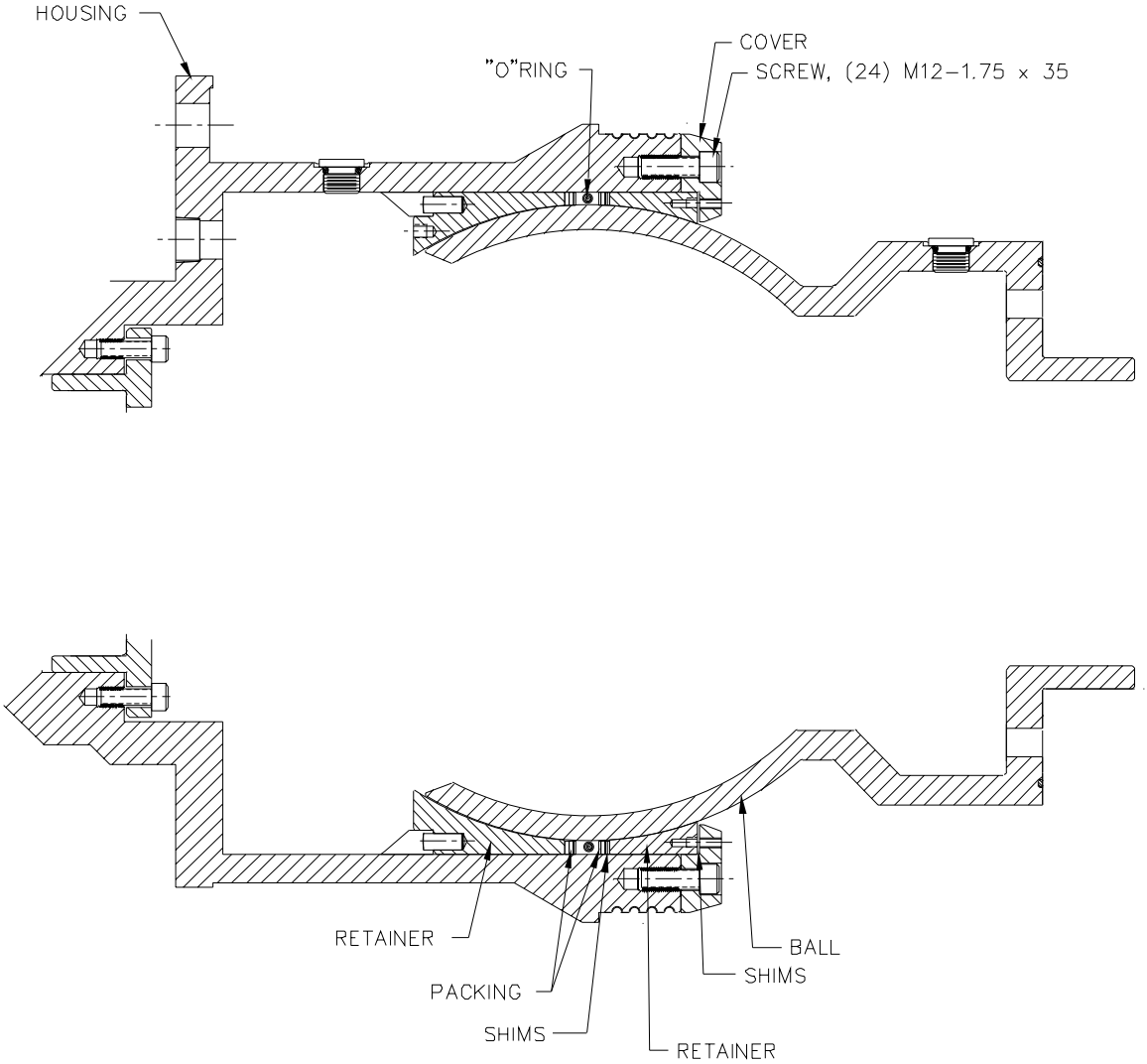

Figure 126. Ball and Socket Parts Identification

2. Install the first packing on top of the retainer, working it smoothly into place. If bulk packing is used, cut two pieces 1390 mm (54.75 in) with the ends cut at a 45 degree angle. The split line should be at either the 10:00 o'clock or the 2:00 o'clock position, using the flat on the socket housing's external mounting flange as the 6:00 o'clock position. Place an o-ring over the packing.

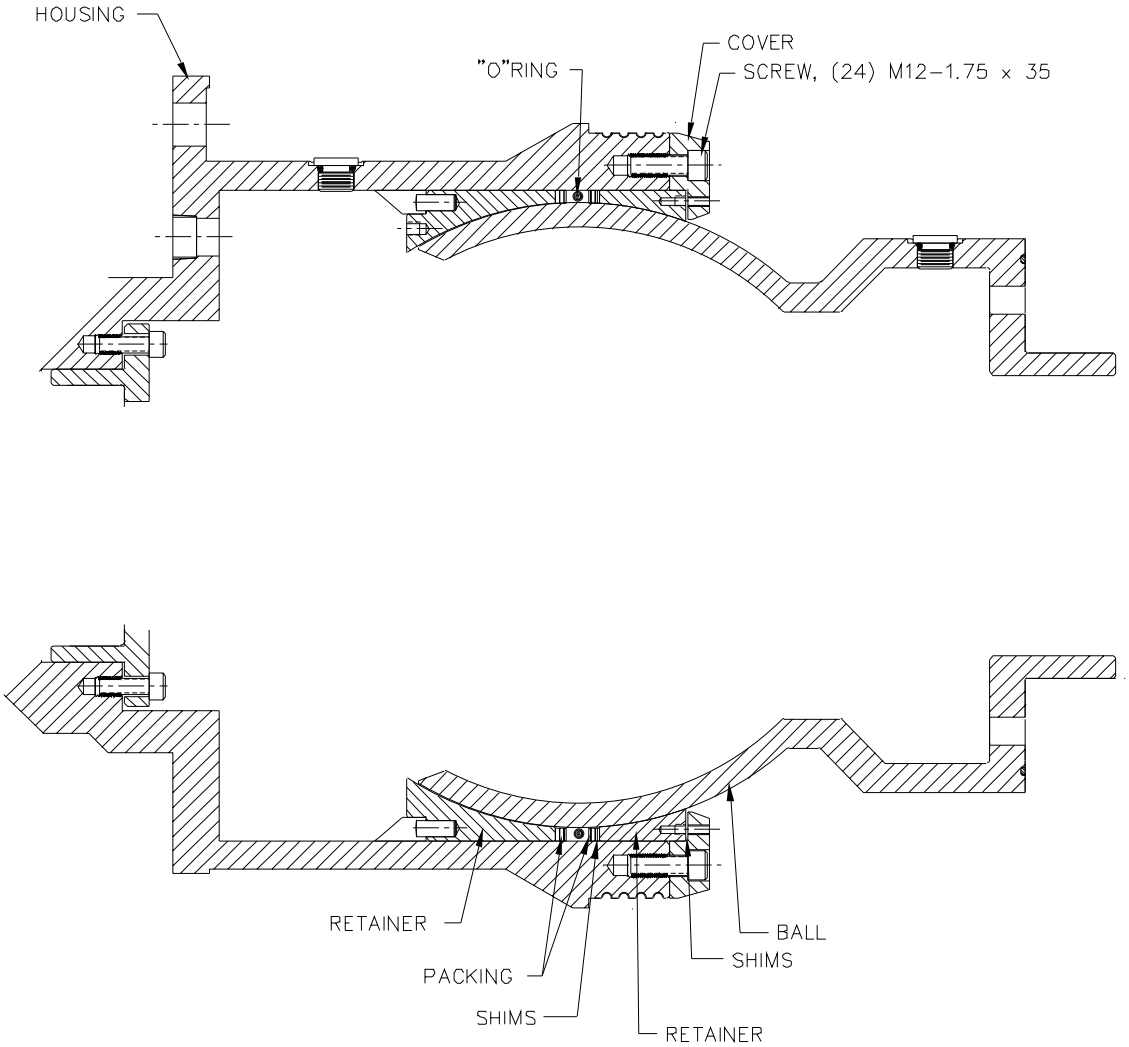

Figure 127. Ball and Socket Parts Identification

3. Install the second packing on top of the o-ring, working it smoothly into place. This split line should be at either the 2:00 o'clock position or the 10:00 o'clock position that was not used for the first packing above. Shims will be added on top of the packing after the rear (output end) retainer is properly shimmed.

Note: Retainer covers on drives with the larger thrust tube contain two notches on the inner circumference to provide clearance with the upper (trim cylinder attachment) boss. Align these notches with the sides of the upper (trim cylinder attachment) boss to clear the corners of the boss when lowering the cover over the thrust tube.

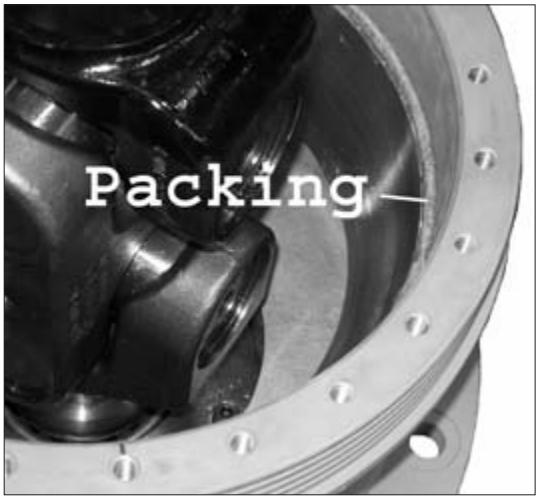

Figure 128. Install Packing

Figure 129. Followed by O-ring and Second Packing

4. Support the thrust tube assembly in a horizontal position. Place the rear retainer (wear sleeve) and approximately 5.08 mm (0.200 in) of the shims and the retainer cover (in that order) over the output end of the thrust tube assembly. Shift all of the components to a position just forward of the large two-holed boss on the thrust tube. Apply a light coat of grease to the entire surface of the thrust ball.

   Note: Coat the U-joint yoke splines with gear oil to assist in the installation of the yoke onto the prop shaft. Coat the retainer with a light coat of grease.

5. Install the thrust assembly into the ball and socket.

   A. Remove four thrust socket-to-transom mounting bolts (two from each side of the thrust socket). Remove the bolts located nearest to the 3 o'clock and 9 o'clock positions.

   B. Fabricate a jacking tool, T-21570-1 as shown in Special Tool Section of this manual. This includes a left and right slide plate, rear support plate and two one inch diameter threaded rods.

   C. Bolt the left and right side plate of the special tool to the socket flange and through the transom. The four socket mounting bolts previously removed may have to be replaced with longer bolts for this operation.

D. Suspend the thrust tube horizontally. Keep the output end of the shaft clear for later installation of the jacking tool. Using caution, insert the thrust tube into the socket. Make sure that the ball enters the socket evenly, that the U-joint engages smoothly, and that the packings, o-ring and shims remain in place.

Figure 130. Carefully Guide the Thrust Tube Assembly Into the Socket and U-joint

⚠ WARNING

Do not attempt to pull the thrust tube into the thrust socket using the retainer ring as damage to the ball or retainer ring may result.

E. Install the jacking tool's rear base plate and the threaded rods using two (2) 1 in. nuts to draw the thrust tube into the socket. Apply even pressure to both sides of the rear base plate.

6. Install the rear retainer (wear sleeve) into the socket.

Figure 131. Insert Prop Shaft Into U-joint, Align Flat (for fin) with Flat On Housing

7. Place the shims on the top of the rear retainer (wear sleeve). The rear retainer (wear sleeve) will be deliberately over-shimmed.

8. Install the cover onto the socket assembly. There will be a gap between the socket housing and the cover.

9. Install every third 1/2-13 x 1.5 socket head capscrew, retaining the cover to the socket..

Figure 132. Place Shims On Retainer, Install Cover, Tighten Screws Evenly

10. Evenly tighten the capscrews while using a feeler gauge to obtain zero gap between the thrust ball and the rear retainer (wear sleeve). Once a zero clearance is achieved, the thrust tube should be tilted left, right, forward, and back (a resistance to movement will be felt) to fully seat the ball. The thrust tube assembly should remain attached to the overhead hoist during this procedure as a safety measure.

⚠ WARNING

Do not allow the thrust ball to pivot against the edge of the installed retainer cover. If the thrust tube drops against the socket, damage may occur.

11. Move the thrust tube back to the horizontal position and recheck for clearance between the thrust ball and rear retainer (wear sleeve). Add or remove shims, as necessary, to obtain zero clearance between the thrust ball and the rear retainer (wear sleeve).

Figure 133. Use Feeler Gauge and Obtain Zero Clearance Between Ball and Retainer

12. When zero clearance is obtained, measure the gap between the socket housing and the cover. The distance measured is equal to the thickness of the shims that must be removed from between the rear retainer and the cover to maintain the desired zero clearance between the ball and rear retainer (wear sleeve).

Figure 134. Use Feeler Gauge to Obtain Average Gap Between Cover and Housing

13. Remove the cover and remove the amount of shims equivalent to or the next size larger than the gap measured.

Example: If the gap measured is 2.92 mm (0.115 in), remove 3.048 mm (0.120 in) in shims. This creates a slightly tight fit between the rear retainer (wear sleeve) and the ball. The rear retainer (wear sleeve) has now been shimmed properly to the ball.

The retainer cover shim pack developed in these preceding steps must be installed into position in the thrust socket while adjusting the previously installed packing and o-ring. No further adjustment of the retainer cover shims will be required.

Note: The thrust ball is sealed to the thrust socket with the combination of two rope packings and an o-ring that were installed previously. To provide a tight seal, the packing and o-ring must be compressed by the rear retainer (wear sleeve) 1.25 mm ± 0.25 mm (0.050. ± 0.010 in.). The amount of compression is adjusted with packing shims.

14. Raise the cover and the shim pack and hang them on the thrust tube. Remove the rear retainer (wear sleeve) and support it on the thrust tube.

Figure 135. Remove the Retainer (wear sleeve), Install Packing Shim Pack

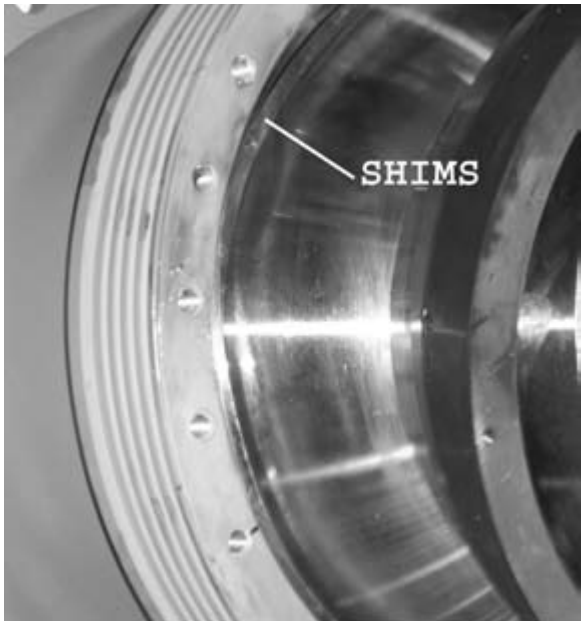

Figure 136. Remove the Retainer (wear sleeve), Install Packing Shim Pack

15. Install a shim pack of the packing shims measuring approximately 3.8 mm (0.150 in) in thickness. These are placed on top of the packing material. The packing will be deliberately over shimmed.

16. Install the rear retainer (wear sleeve) followed by the shim pack and cover. Install every third 1/2-13 x 1.5 socket head capscrew, retaining the cover to the socket. Evenly torque the screws to 34 N-m (25 ft-lbs).

17. Measure the gap between the thrust socket housing and the cover in several positions around the diameter of the thrust socket. Average these measurements and label this average as **A** (tight retainer bolts). Note that if there is no gap, more shims will need to be added on the packing material.

Figure 137. Use Feeler Gauge to Obtain Average Gap Between Cover and Housing - Gap A

18. Loosen the cover retaining screws, and allow the packing and o-ring to relax.

19. Measure the gap between the thrust socket housing and the cover in several positions around the diameter of the thrust socket. Average these measurements and label this average as **B** (loose retainer bolts).

Figure 138. Use Feeler Gauge to Obtain Average Gap Between Cover and Housing - Gap B

20. Subtract **A** (tight retainer bolts) from **B** (loose retainer bolts). Record the difference as **C** (actual compression). **C** represents the actual compression that results from the packing and o-ring being compressed with 3.81 mm (0.150 in) thickness of packing shims.

21. Subtract the specified amount of compression (1.25 mm ± 0.25 mm (0.050. ± .010 in)) from **C** (the actual compression). Record this new calculation as **D** (excess compression).

22. Add **A** (tight retainer bolts) to **D** (excess compression). The sum is equal to the thickness of packing shims that must be removed in order to compress the packing and o-ring to the desired amount of (1.25 mm ± 0.25 mm (0.050. ± .010 in)).

	Calculation:	Example:		
B	Loose Retainer bolts	2.80 mm	(0.110 in.)	
-A	Tight Retainer bolts	-0.75 mm	(0.030 in.)	
C	Actual Compression	2.03 mm	(0.080 in.)	
C	Actual Compression	2.03 mm	(0.080 in.)	
-( )	Specified Compression	-1.25 mm	+/- 0.25 mm	(0.050 in +/- 0.010 in.)
D	Excessive Compression	0.75 mm	+/- 0.25 mm	(0.030 in +/- 0.010 in.)
A	Tight Retainer bolts	0.75 mm	(0.030 in.)	
+D	Excessive Compression	0.75 mm	+/- 0.25 mm	(0.030 in +/- 0.010 in.)
	Thickness of packing shims to remove	1.50 mm	+/- 0.25 mm	(0.060 in +/- 0.010 in.)

Figure 139. Example of Packing Shim Calculation

23. Remove the cover, rear retainer (wear sleeve) shims, and rear retainer (wear sleeve). Remove the packing shims. Adjust the shim pack as calculated above, and reinstall shims over packing.

24. Install the rear retainer (wear sleeve), shims, and cover. Install 24 1/2-13 x 1.5 socket head capscrews and torque to 60 N-m (45 ft-lbs).

25. Remove the jacking tool and install the four mounting bolts. Torque the mounting bolts to 176 - 203 N-m (130 to 150 ft-lbs).

Removal and Replacement of Thrust Ball Packing and O-Ring

Note: If the packing and o-ring must be replaced due to leakage, remove the ball and thrust tube assembly from the socket, and follow the complete instructions for assembly of the thrust tube to the socket while attached to the transom as shown in the previous section.

Boot Installation

Note: The boot is not intended to keep water out. Its purpose is to protect the drive from marine growth and debris. The fin must be removed to install the boot.

1. Clean the interior of the boot with a clean cloth and cleaning solvent.

2. Holding the boot with the large end facing forward, pass the boot over the prop shaft and slide down and over the thrust socket. Make sure that the grooves in the thrust socket housing match up with the ridges on the boot.

3. Secure the boot to the thrust socket with two circle clamps. Make sure that the clamp screws are on the top of the unit. They create a drag if positioned on the bottom or in the water. Apply anti-seize lubricating compound on the clamp threads.

4. Position the small end of the boot over the thrust tube so that the flat portion of the boot is just behind the thrust-tube-to-ball joint. Secure the boot with two circle clamps. Make sure that the screws are on top of the unit.

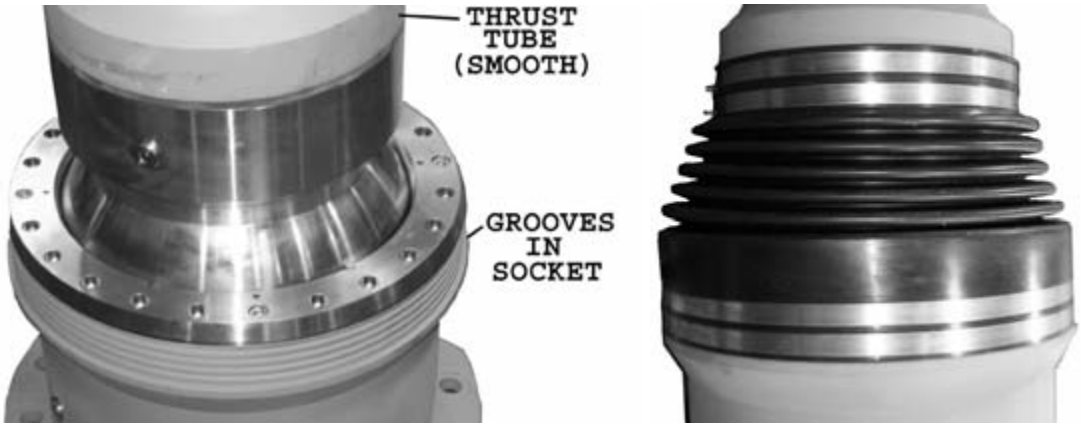

Figure 140. Install Boot Over Output Placing Ribs In Boot In Socket Grooves

Fin Reattachment

1. Remove any rough edges or burrs from the mating surfaces of the thrust tube and fin pad. Repair any paint damage that results. Clean the flat surfaces and threaded holes with alcohol. Spread a thin layer of waterproof (marine-grade) silicone sealer on the thrust tube fin pad, using care to keep silicone out of the threaded holes.

2. Coat the clean capscrew threads with Loctite 242 blue or similar liquid thread locker. Place the fin on the fin pad and install the sixteen 7/16-14 x 1.25 socket head capscrews. If necessary, tap the fin with a plastic mallet to align the fin on the base. Tighten all screws evenly, squeezing excessive sealer to the outside.

3. Torque the capscrews to 44 N-m (32 ft-lbs) Continue re-torquing until the capscrews no longer turn, as the sealer is squeezed out.

4. Clean the excess sealer from the seam.

Figure 141. Apply Silicone to Thrust Tube Surface

Figure 142. Put Pin In Place and Install Bolts

Figure 143. Torque Capscrews, Remove Excess Silicone from Tube

Figure 144. Torque Capscrews, Remove Excess Silicone from Tube

Attaching Thrust Unit to Transom

Note: A review of the Installation Section of this manual could be very helpful to properly installing the ASD16.

1. Using suitable lifting device, cradle the unit into place against the transom with the input shaft installed into the hole in transom. See the following sketches for proper lifting procedures.

Note: On drives shipped with protective shipping covers on the aft end, remove the cover before attaching the hoist cable to the propeller shaft.

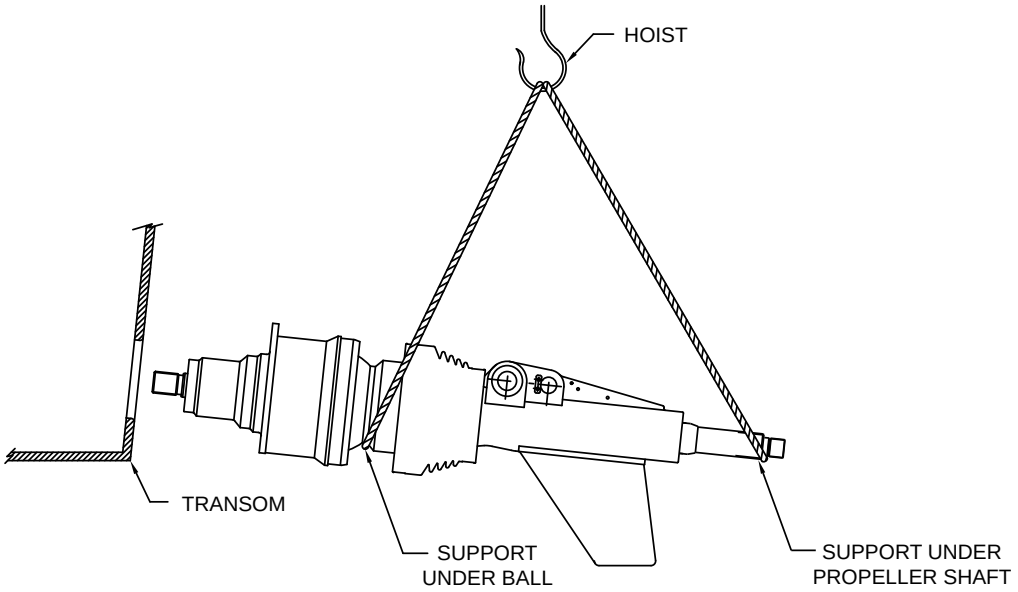

Figure 145. Support Unit for Installation

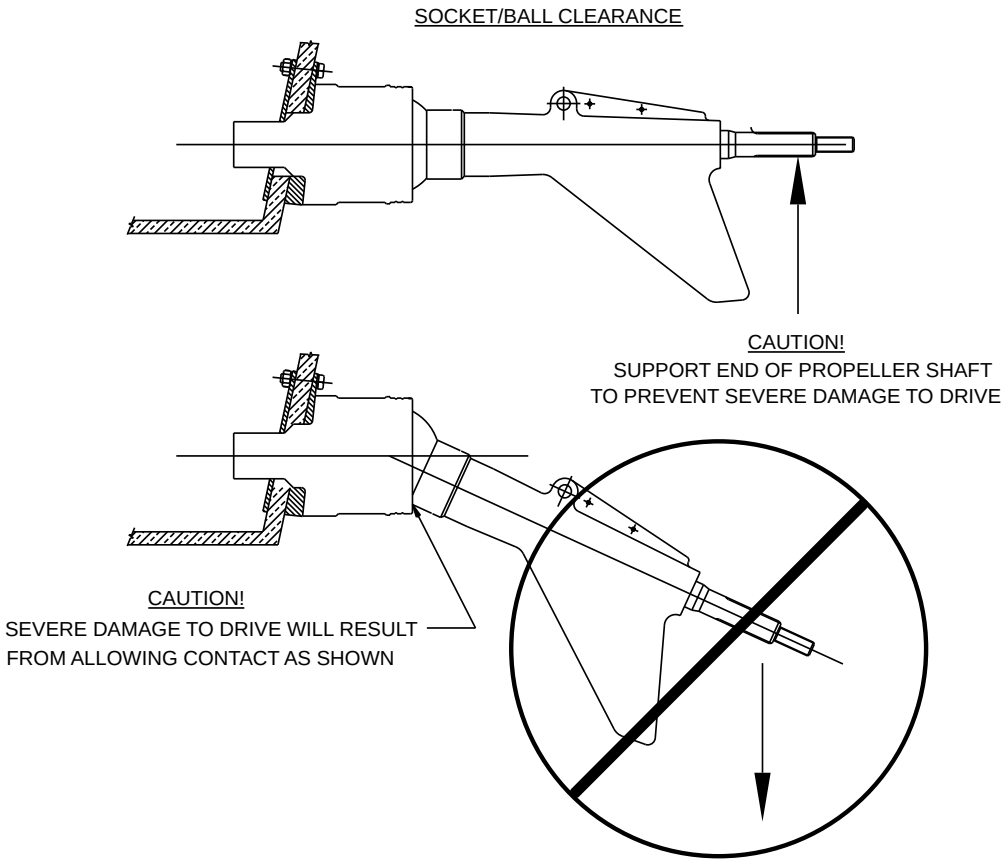

Figure 146. Protect the Ball from Damage

2. Apply marine sealant (3M brand 5200 marine sealant or equivalent is recommended) to the transom area where the ASD unit is to be installed.

3. Using a suitable lifting device, lift the ASD unit up against the transom.

   Note: If necessary, place a Delrin plastic isolation pad between the socket and the transom.

4. Align the mounting bolt holes.

5. Coat each bolt with marine transom sealant (3M brand 5200 marine sealant or equivalent is recommended) to prevent leakage.

6. Install the mounting bolts with Delrin plastic bushings through the transom.

   Note: If necessary, place a Delrin plastic isolation pad inside the vessel between the backing plate and transom.

7. Secure the backing plate with the capscrews, washers, and nuts.

8. Install the nuts and washers inside the transom and torque to 319 N-m (235 ft-lbs). Follow the torque sequence shown.

   Note: Delrin isolation pads and bushings are only needed on metal vessels and vessels with graphite composite hulls.

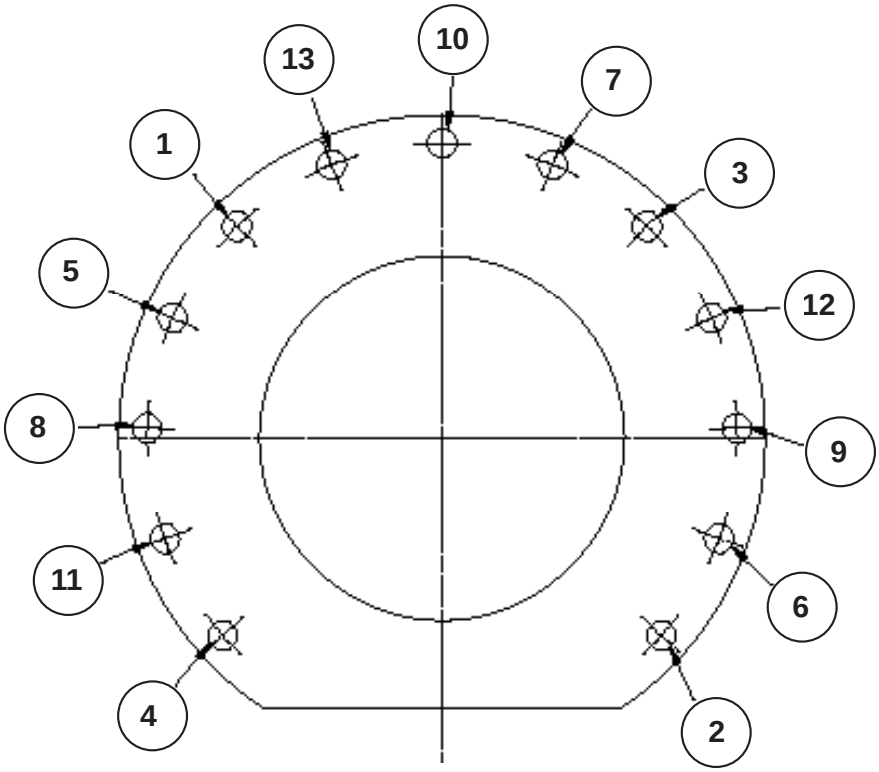

NOTE:
1) Torque to full value in 3 stages as follows:
   108 N-m (80 ft-lbs)
   217 N-m (160 ft-lbs)
   319 N-m (235 ft-lbs)
2) Recheck all bolts to a torque level of 319 N-m (235 ft-lbs.)

Figure 147. Torque sequence for socket installation on hull

Propeller Installation - Routine Maintenance

1. Apply a thin coat of anti-seize lubricating compound to the propeller shaft as shown in **Figure 150**.

CAUTION

Do not apply anti-seize compound to the propeller or propeller shaft tapers. Tapers must be clean and dry for assembly.

2. **Drives having a sleeve-mounted mechanical seal (1007027A, 1018347, 1018684 and similar designs):** Install the propeller, spacer, propeller nut, lock nut, on the shaft as shown in **Figure 148**. Torque the propeller nut to 1356 N-m (1000 ft.-lbs). Torque the jam (lock) nut to 949 to 1085 N-m (700 to 800 ft.-lbs). Approach the lower value, then continue until a cotter pin slot in the nut aligns with the hole in the shaft. Install the cotter pin.

   Assemblies 1020763 and 1021360 with long taper and with seal installed directly on the shaft: Apply a thin coat of anti-seize lubricant to the propeller shaft as shown in **Figure 149**. Place the propeller (without rope guard) and propeller nuts, onto the shaft and torque to the specified torque. Measure and record the width of the gap between the forward propeller face and the aft face of the seal retaining ring. Remove the propeller and install the rope guard on its forward face. Place a group of shims with thickness equal to the previously measured gap behind the seal retaining ring.

   Re-install the propeller, apply the specified torque, and insert the cotter pin.

   Note: The propeller nut must be re-torqued in accordance with the following schedule.

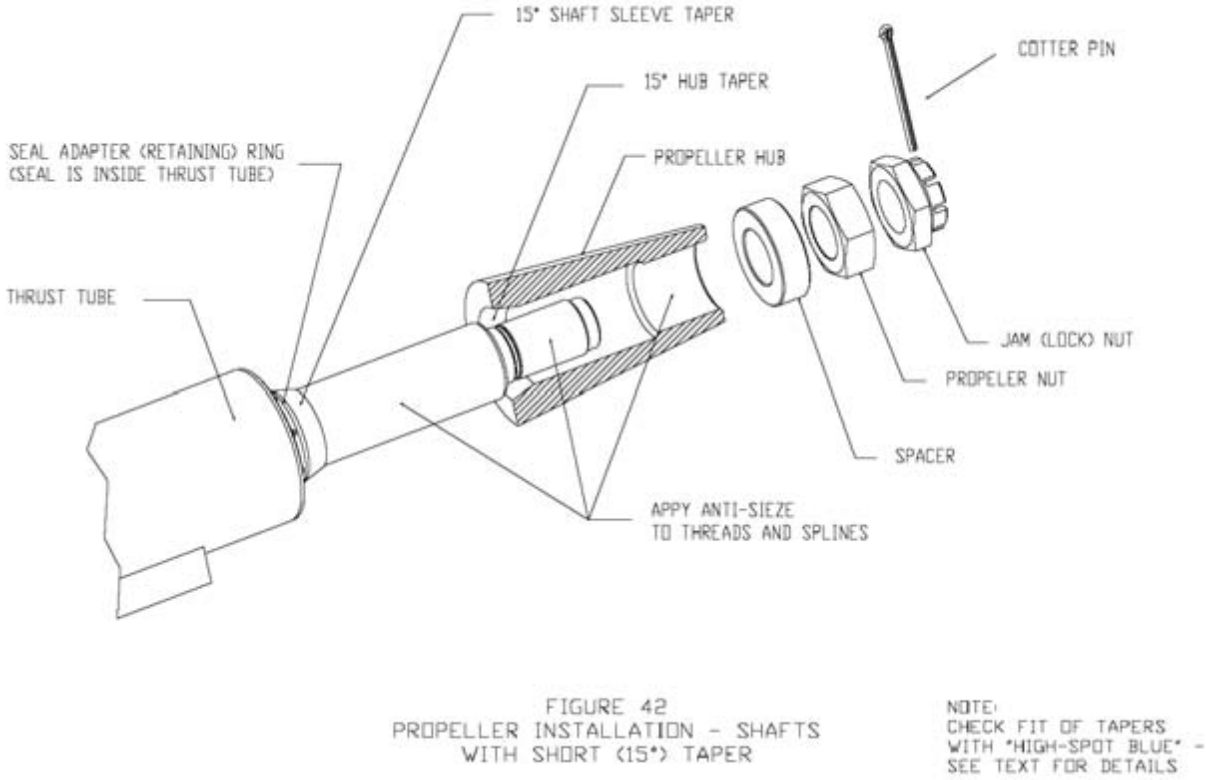

Figure 148. Propeller Installation - Shafts with short (15 Degree) Taper

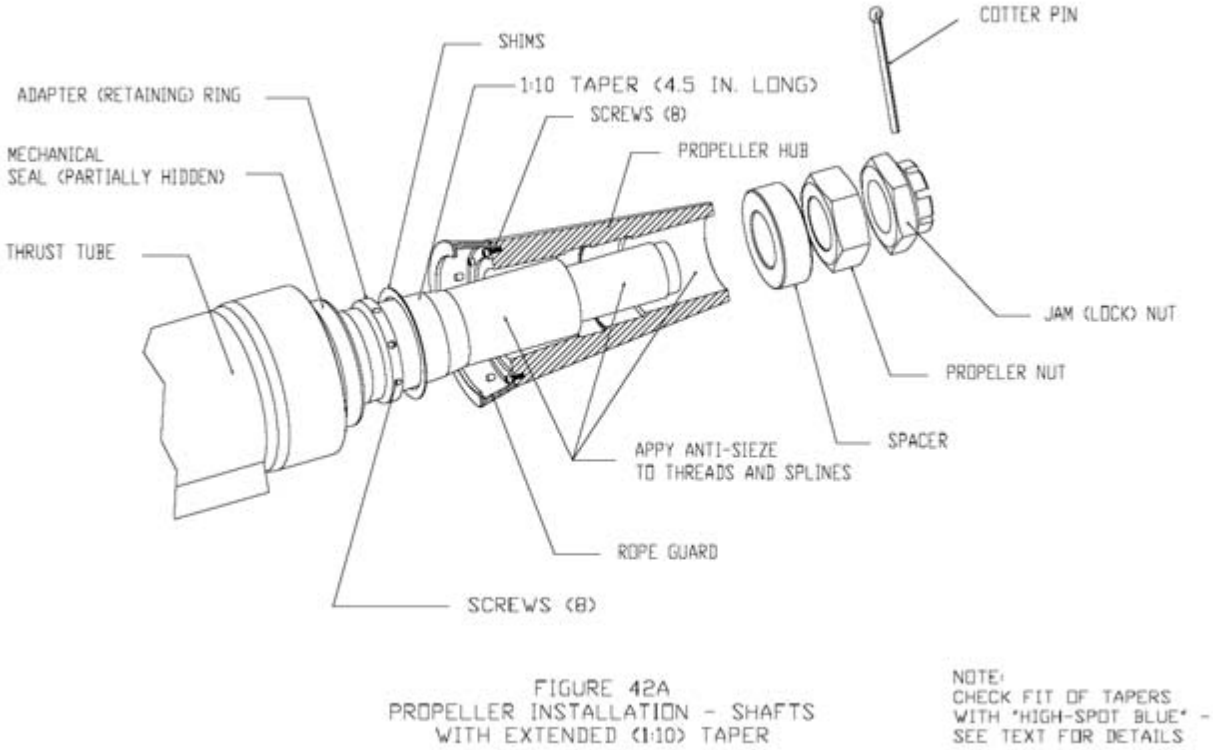

Figure 149. Propeller Installation - Shafts with extended (15 Degree) Taper

3. The propeller nut and lock nut must be checked for torque retention to the above values after initial use or within 10 hours of operation.

4. The propeller nut torque **MUST** be checked in the following operational interval

   A. The propeller nut torque must be checked in accordance with step 2 after an additional 250 hours of operation. If the torque is correct, go to step B. If the torque is incorrect, re-torque the nut and repeat step A.

   B. The propeller nut torque must be checked in accordance with step 2 after an additional 500 hours of operation. If the torque is correct, go to step C. If the torque is incorrect, re-torque the nut and repeat step B.

   C. The propeller nut torque must be checked in accordance with step 2 after an additional 1000 hours of operation. If the torque is correct, go to step D. If the torque is incorrect, re-torque the nut and repeat step C.

   D. The propeller nut torque must be checked in accordance with step 2 after an additional 1500 hours of operation. If the torque is correct, go to step E. If the torque is incorrect, re-torque the nut and repeat step D.

   E. Continue to increase the interval in increments of 1500 hours until the regular “haulout” interval of the vessel is reached.

   F. If at any point in steps A through F, the “haulout” interval of the vessel is reached or surpassed, the torque check interval may be established to be the same as the “haulout” interval. Record the final interval for reference.

Propeller Installation - New Applications

First time installation of new propellers will require a check to verify proper mating of the tapered shoulder on the propeller with the tapered shoulder on the shaft.

⚠CAUTION

Mismatched tapers or loose propeller nuts may result in a damaged or broken propeller shaft and a lost propeller.

Follow the procedure below to check the propeller to shaft fit:

1. Clean the taper on the forward end of the propeller hub and the tapered shoulder of the shaft with alcohol or other cleaner and wipe dry.

2. Apply blue contact paste to the shaft taper as follows. Use a machinist's blue paste such as Dykem "HI-Spot Blue" Dykem part number 83307 marketed by ITW Dymon Company, 805 E. Old 56 Highway, Olathe, KS 66061 USA.

3. Apply the paste to the shaft taper with a cloth or felt patch as thinly and evenly as possible over the entire tapered surface. The more evenly the dye is applied, the more accurate will be the reading.

4. Slide the propeller onto the shaft until the male and female tapers touch. Install the propeller nut and torque the nut to 200 N-m (150 ft-lbs). Verify that the propeller is securely seated on the shaft taper.

5. Remove the propeller nut, and slide the propeller away from the shaft, being careful not to disturb the contact paste on the shaft and on the propeller hub internal (female) taper.

6. Evaluate the contact pattern on both tapers. See **Figure 151** or **152** for guidance on acceptable contact patterns. The surfaces should match approximately 80% of the total tapered area.

   Note: It is important that the contact should be either evenly distributed or biased toward the large end of both the shaft taper and the propeller taper.. If contact is predominant at the small end, the shaft may be over-stressed locally and may fail. Contact Twin Disc if the taper contact pattern is not in accordance with Figure 151 or 152.

7. Once the contact is confirmed to be acceptable, clean the dye from the tapers with the above solvent and re-install the propeller as outlined in the previous section.

Note: Refer to the Propeller Torque Maintenance in the Preventative Maintenance Section of this manual.

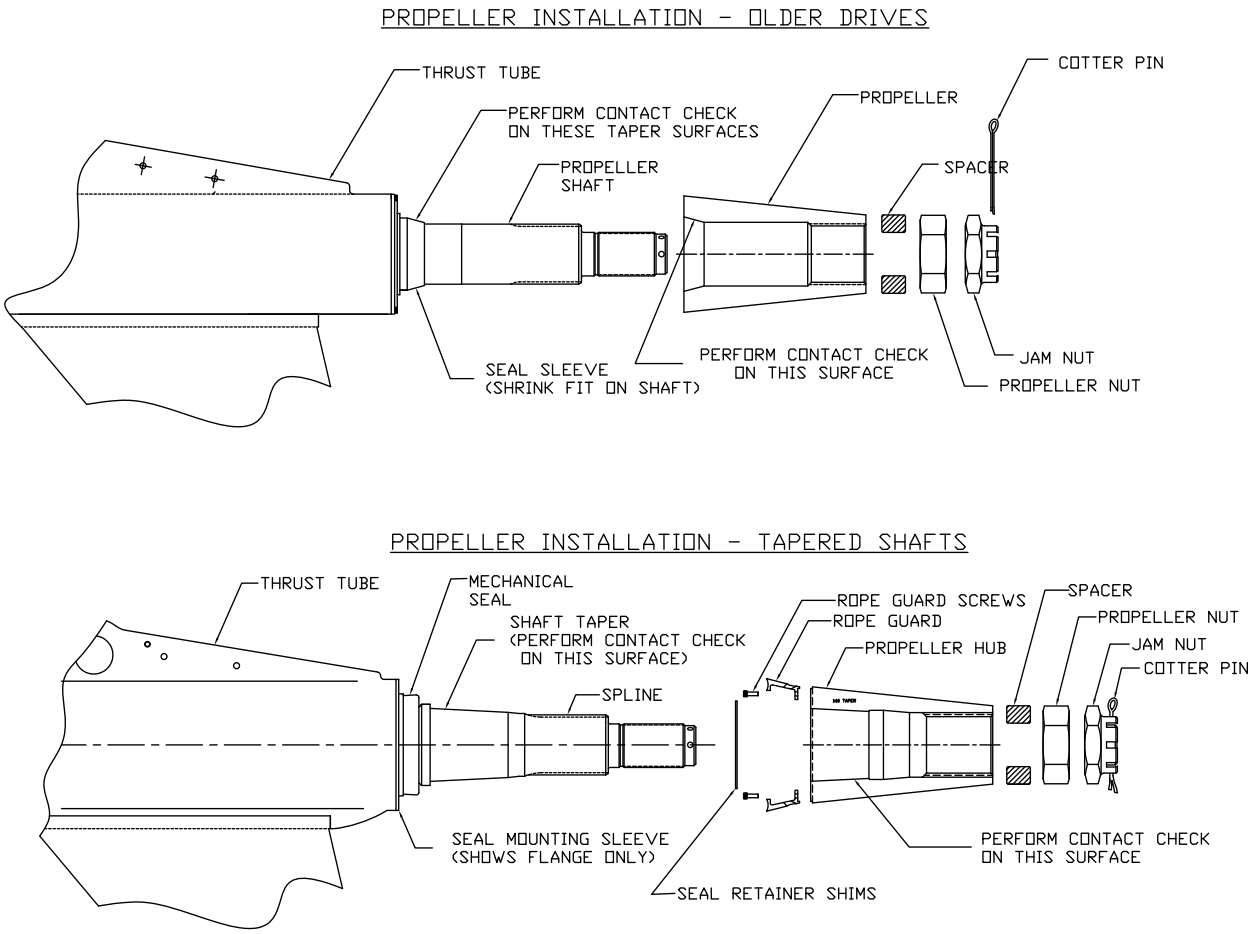

Figure 150. Propeller Installation

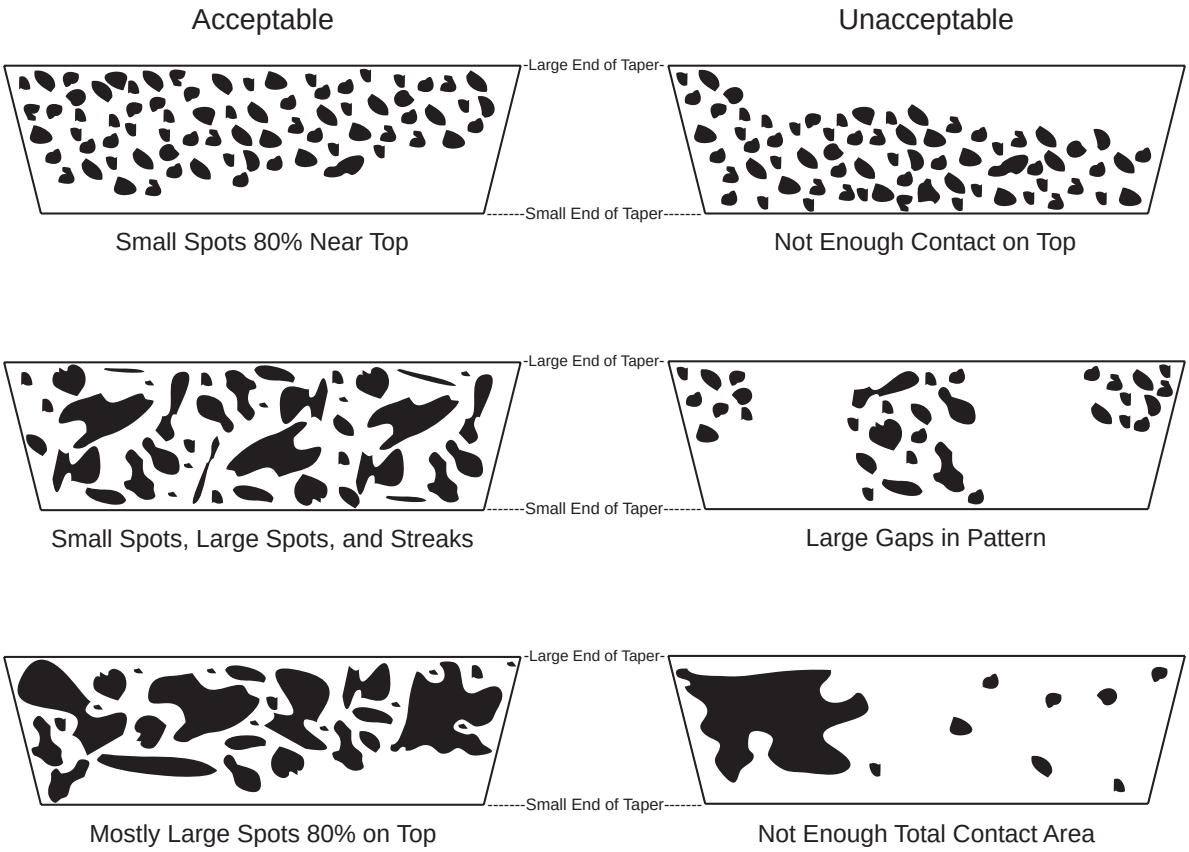

Figure 151. Dye Contact Pattern Samples for Propellers with Short (15º) Tapers

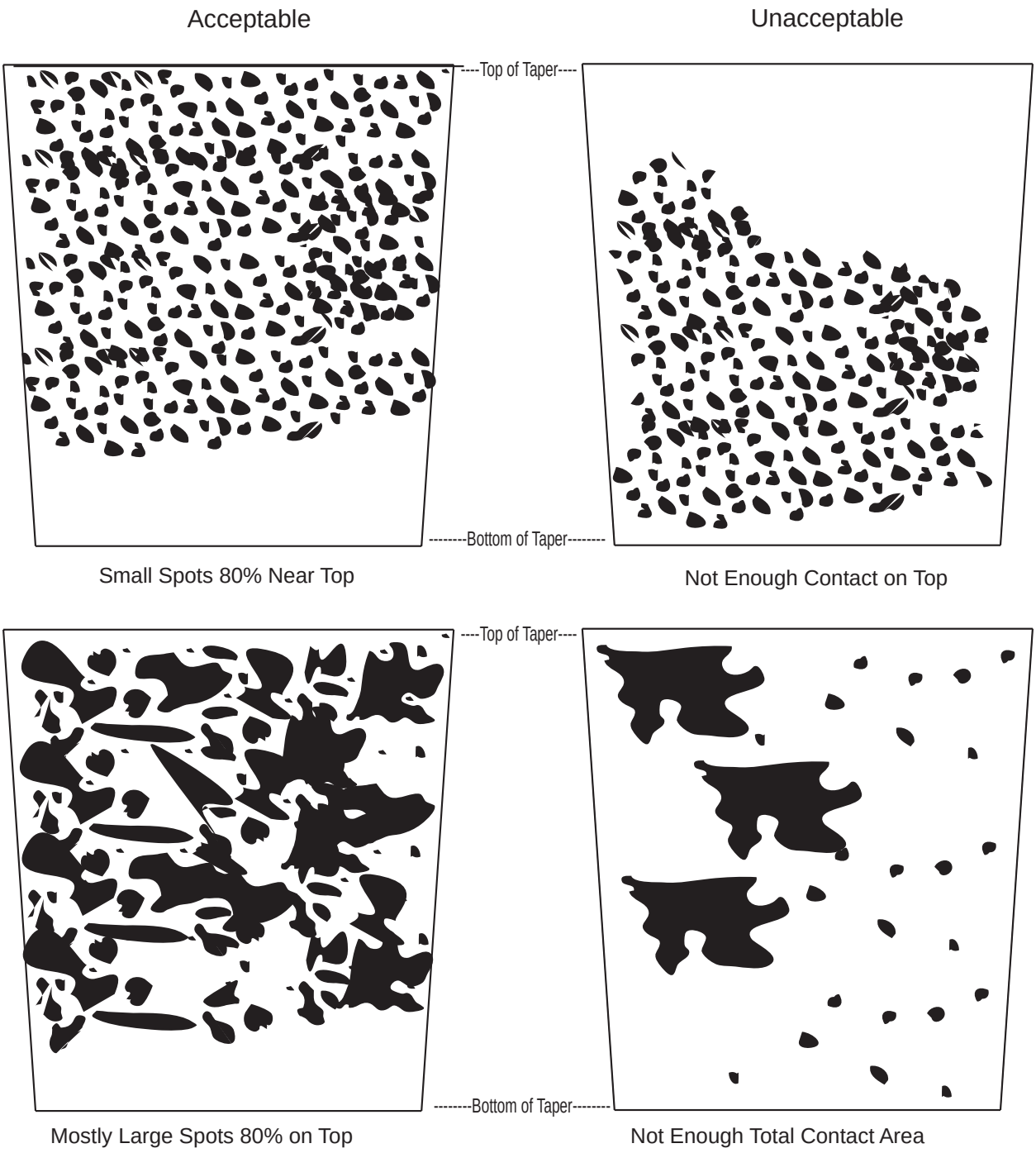

Figure 152. Dye Contact Pattern Samples for Propellers with Long Shallow Tapers (Only two views shown)

Special Tools

List of Special Tools

Drive Installation Tools

Jacking Tool	T-21570-1 (1 of 2)
Jacking Tool	T-21570-1 (2 of 2)

Tools for Mechanical Face Seal

Seal Installation Tool	T-18050-643
Forward (Seal) Seat Installation Tool	T-18050-748
Rotating Assembly (Seal) Installation Tool	T-18050-642A
Rotating Assembly (Seal) Installation Tool	T-18050-642B
Drill Bushing (Mechanical Seal)	T-18050-783
Seal Rotating Assembly Extractor	T-18050-641
Forward (Seal) Seat Extractor	T-18050-745
Mechanical Seal Driver	T-18050-789

Tools for Setting Shaft End-Play

Propeller Shaft Indicator Holder	T-18050-746
Socket Shaft Indicator Holder	T-18050-747

Miscellaneous Tools

High Pressure Seal Driver	T-21549-27
Wear Sleeve Installation Tool	T-18050-644
Propeller Shaft Lifting Adapter	T-21172-4
Thrust Ball Lifting Tool (Top View)	T-22013-5A
Thrust Ball Lifting Tool (Side View)	T-22013-5A
Thrust Ball Lifting Tool	T-22013-5B
Thrust Bearing Sleeve Insertion Tool	T-18050-792
Propeller Bearing Sleeve Insertion Tool	T-18050-793 -Inner
Propeller Bearing Sleeve Insertion Tool	T-18050-794 -Outer

Assembly Stand

Assembly Stand Installation Arrangement	T-21090 (1 of 2)
Assembly Stand Installation Arrangement	T-21090 (2 of 2)
Assembly Stand Adapter Weldment	T-21089 (Side View)
Assembly Stand Adapter Weldment	T-21089 (End View)
Assembly Stand Thrust Tube Clamp	T-21089-1
Assembly Stand Thrust Tube Cradle	T-21089-2
Assembly Stand Weldment Base	T-21089-3
Assembly Stand Bracket Assembly	T-21089-4

Jacking Tool T-21570-1 (1 of 2)

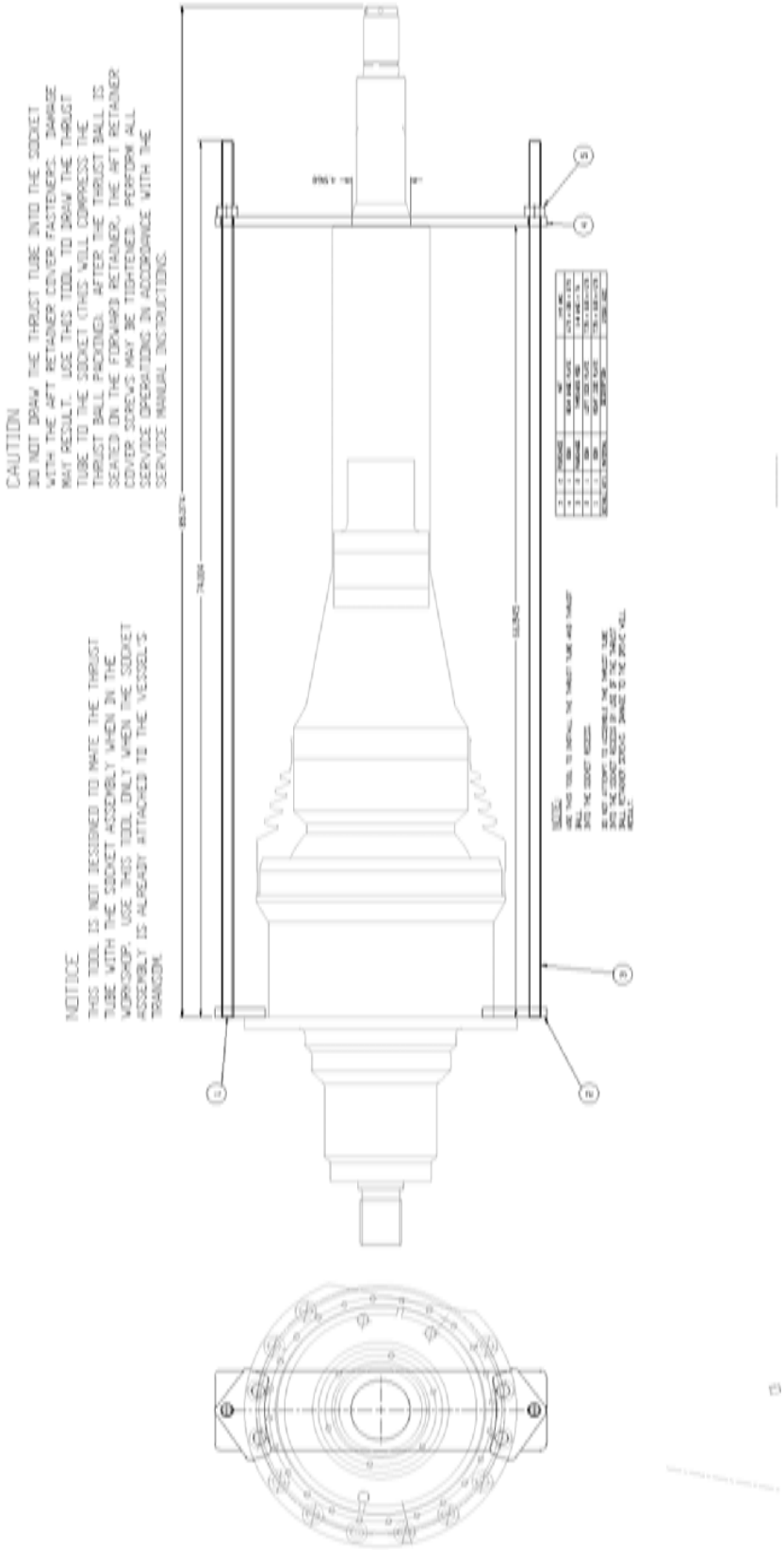

Jacking Tool T-21570-1 (2 of 2)

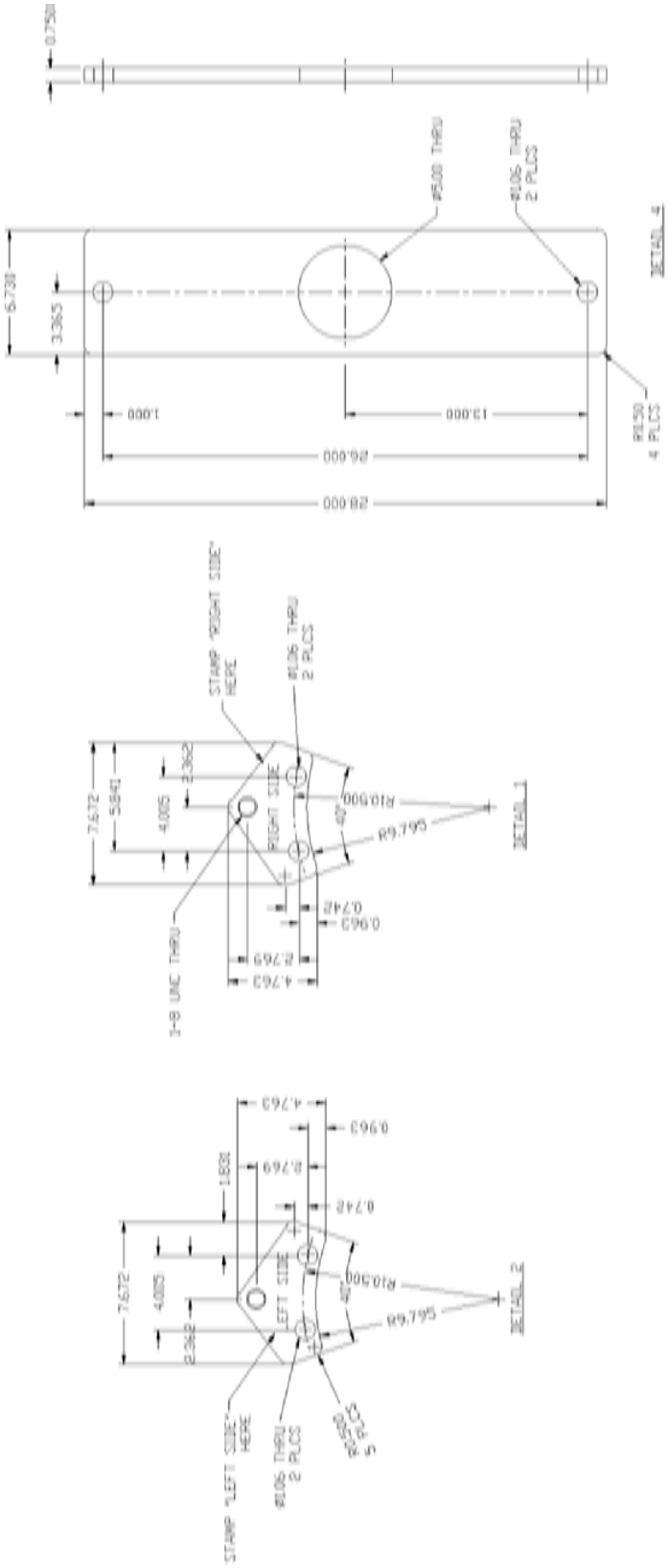

Seal Installation Tool — T-18050-643

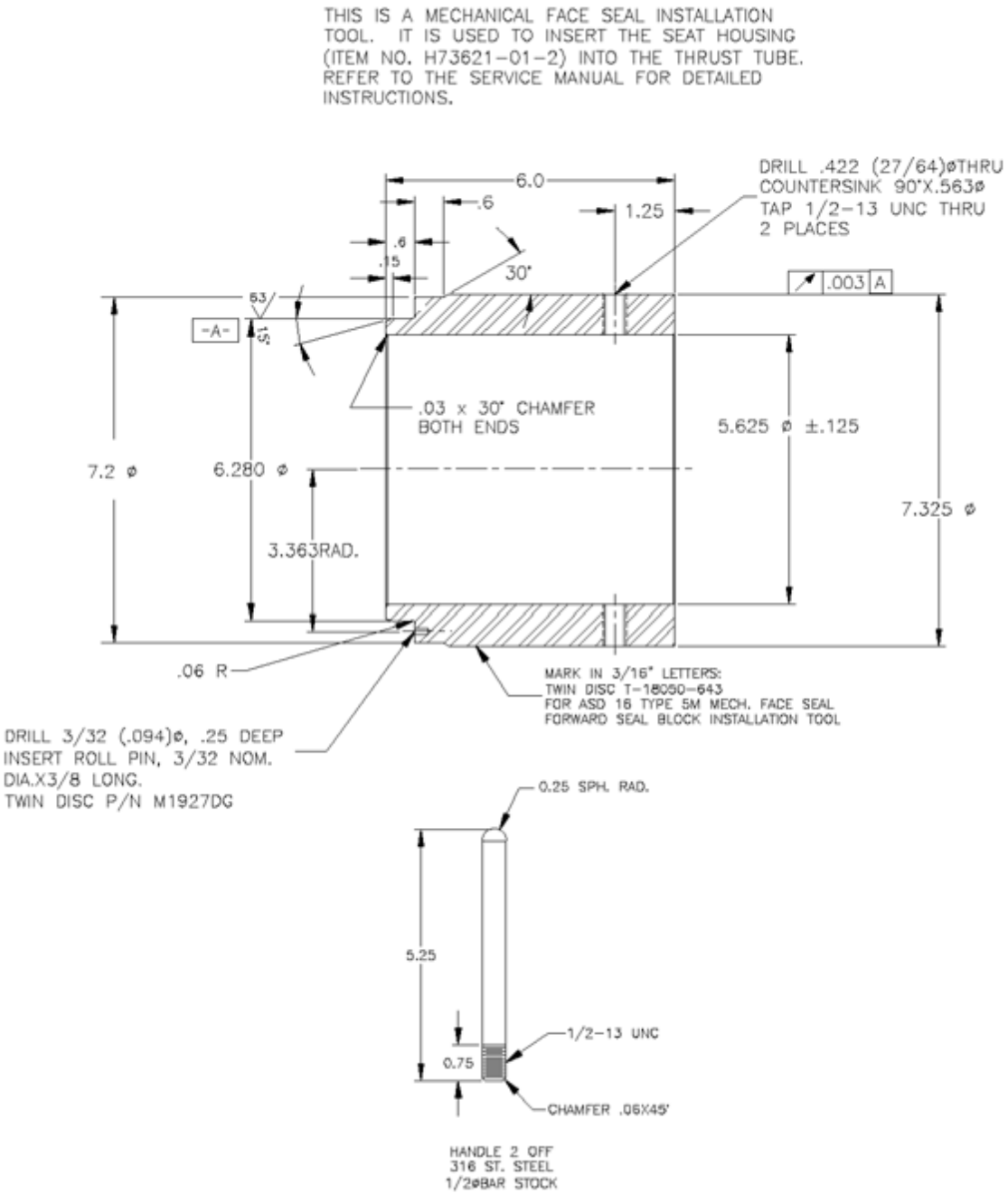

Forward (Seal) Seat Installation Tool — T-18050-748

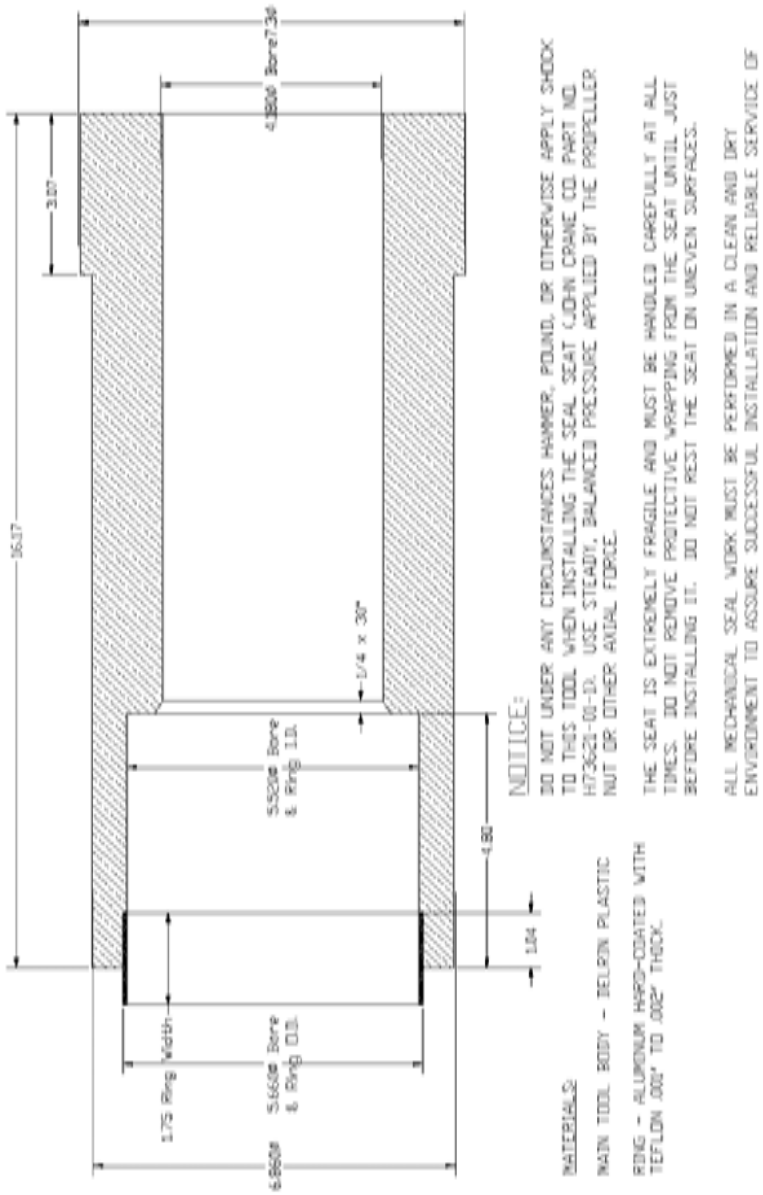

Rotating Assembly (Seal) Installation Tool — T-18050-642A

ITEM	QTY	MATERIAL	DESCRIPTION	STOCK SIZE
1	1	6061-T6 ALUM.	DRIVER	SEE SHEET #2
2	1	ALUMINUM	CLAMP RING FOR INDICATOR	SEE SHEET #2
3	1	PURCHASE	COLLET, SPLIT	FEDERAL P/N AD-87
4	2	BAR STOCK	HANDLE	SEE SHEET #2
5	1	PURCHASE	SHCS (SOCKET HEAD CAPSCREW)	1/2-13UNC x 2.25

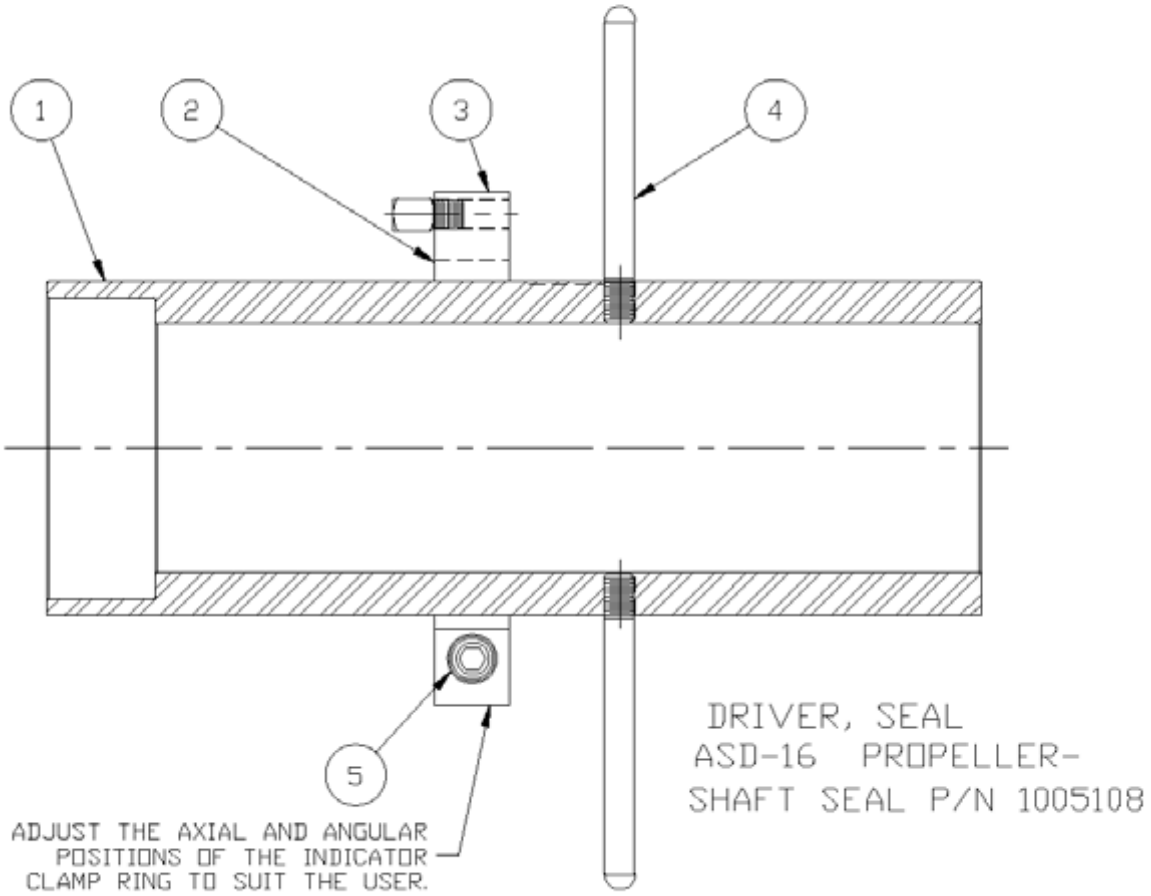

NOTE:
THIS TOOL IS INTENDED FOR INSTALLING THE MECHANICAL SEAL ROTATING ASSEMBLY (JOHN CRANE CO. PART NOS. H73621-01-3 THROUGH H73621-01-11)

CAUTION:
THE SEAL IS EXTREMELY FRAGILE AND MUST BE HANDLED CAREFULLY AT ALL TIMES. DO NOT REMOVE PROTECTIVE WRAPPING FROM THE SEAL OR SEAL COMPONENTS UNTIL JUST BEFORE INSTALLATION. DO NOT REST THE SEAT ON UNEVEN SURFACES.

DO NOT UNDER ANY CIRCUMSTANCES HAMMER, POUND, OR OTHERWISE APPLY SHOCK TO THIS TOOL WHEN INSTALLING THE ROTATING ASSEMBLY. USE STEADY, BALANCED PRESSURE APPLIED BY THE PROPELLER NUT OR OTHER AXIAL FORCE.

ALL MECHANICAL SEAL WORK MUST BE PERFORMED IN A CLEAN AND DRY ENVIRONMENT TO ASSURE SUCCESSFUL INSTALLATION AND RELIABLE SERVICE OF THE SEAL.

Rotating Assembly (Seal) Installation Tool — T-18050-642B

ITEM	QTY	MATERIAL	DESCRIPTION	STOCK SIZE
1	1	6061-T6 ALUM.	DRIVER	ø5.50 × 15.50
2	1	ALUMINUM	RING, INDICATOR CLAMP	ø8.50 × 1.25
4	2	BAR STOCK	HANDLE	ø0.50 × 5.25

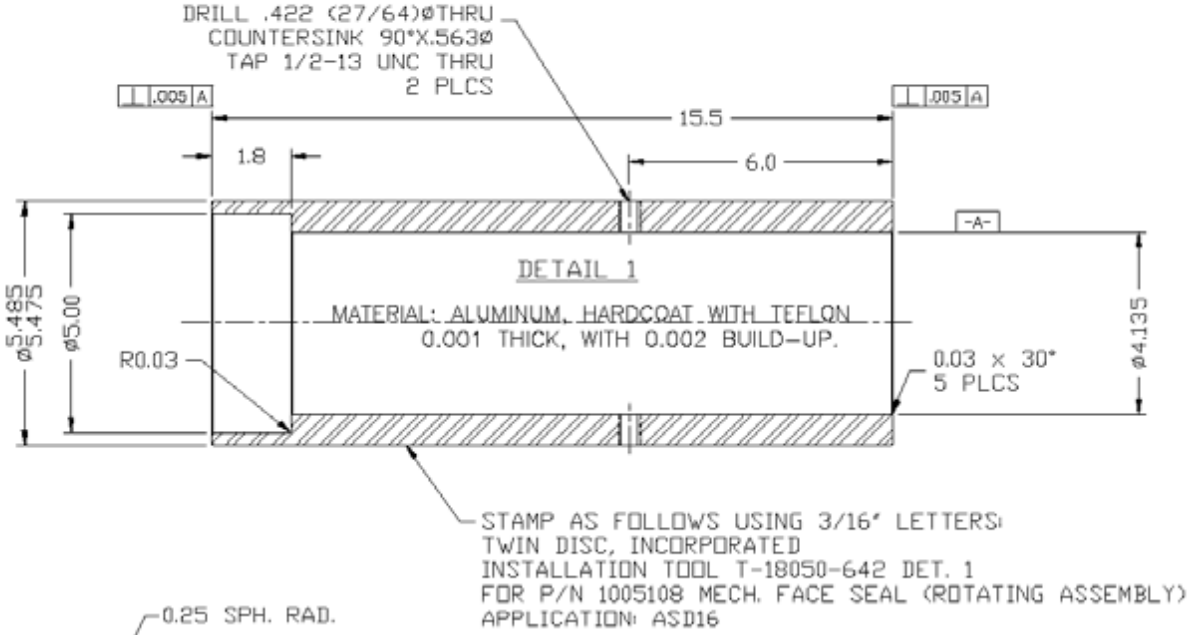

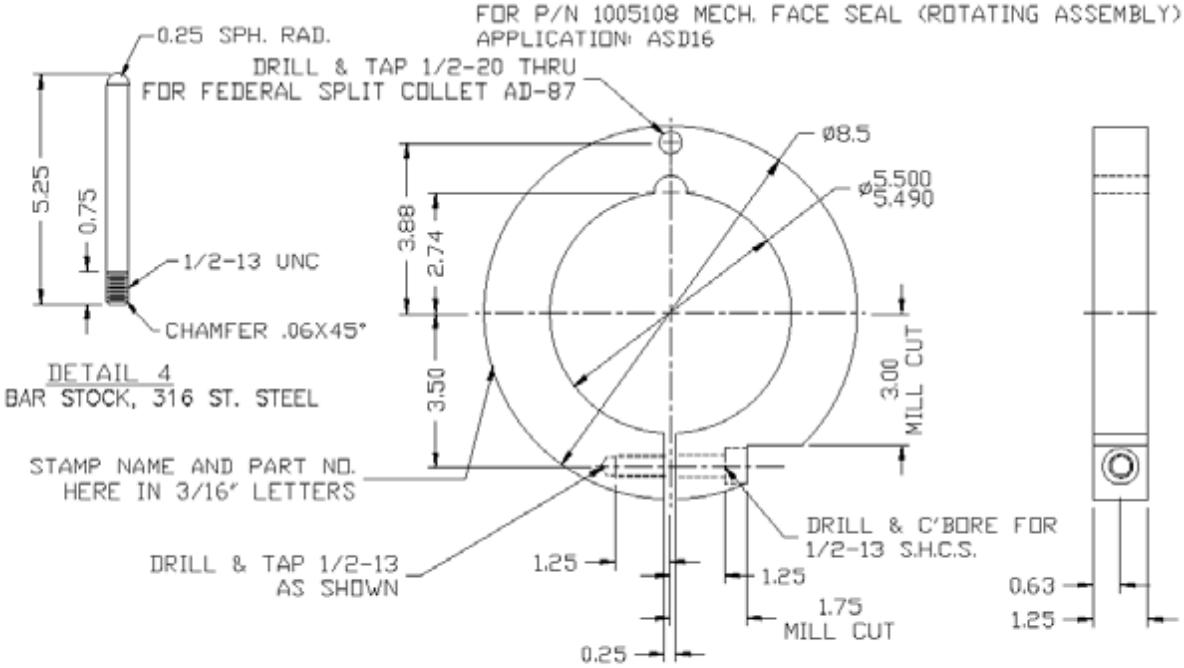

DETAIL 2

MATERIAL: ALUMINUM, HARDCOAT WITH TEFLON
0.001 THICK, WITH 0.002 BUILD-UP.

Drill Bushing (Mechanical Seal) — T-18050-783

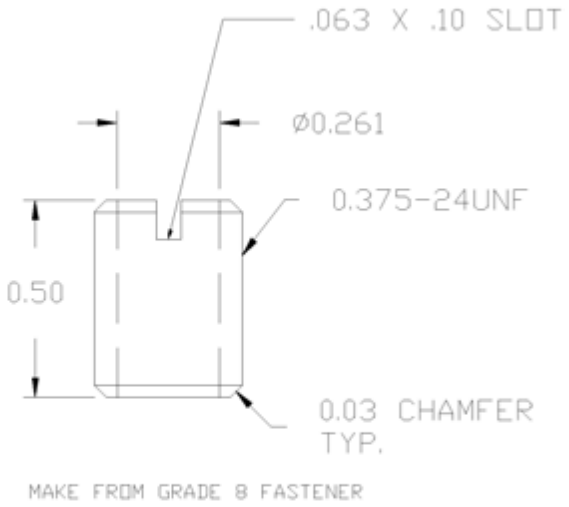

CAUTION:
DO NOT drill ANY dimple-holes in propeller shafts with Long (1-in-10) Taper (this refers to the propeller taper that is 4.50 inches long). Drilling dimple holes in these shafts will cause serious damage to the shaft and void the warranty. These shafts provide other means to assure location of the seal.

1. This drill bushing is to be used for installation of p/n 1005108 Mechanical Seal (John Crane-Lips type 5M). Insert bushing into retaining ring (John Crane p/n H73621-01-3) screw holes when drilling dimples into propeller shaft sleeve. Use standard letter ‘G’ drill (0.261) with this bushing when dimpling shaft sleeve. (See Mechanical Face Seal Installation section of this manual)

2. Note: this drill bushing to be used for installation of p/n 1005108 mechanical seal (John Crane-Lips type 5M).

3. Insert bushing into retaining ring (JC-L p/n H73621-01-3) screw holes when drilling dimples into propeller shaft sleeve.

4. Use standard letter ‘G’ drill (0.261) with this bushing when dimpling shaft sleeve.

Seal Rotating Assembly Extractor — T-18050-641

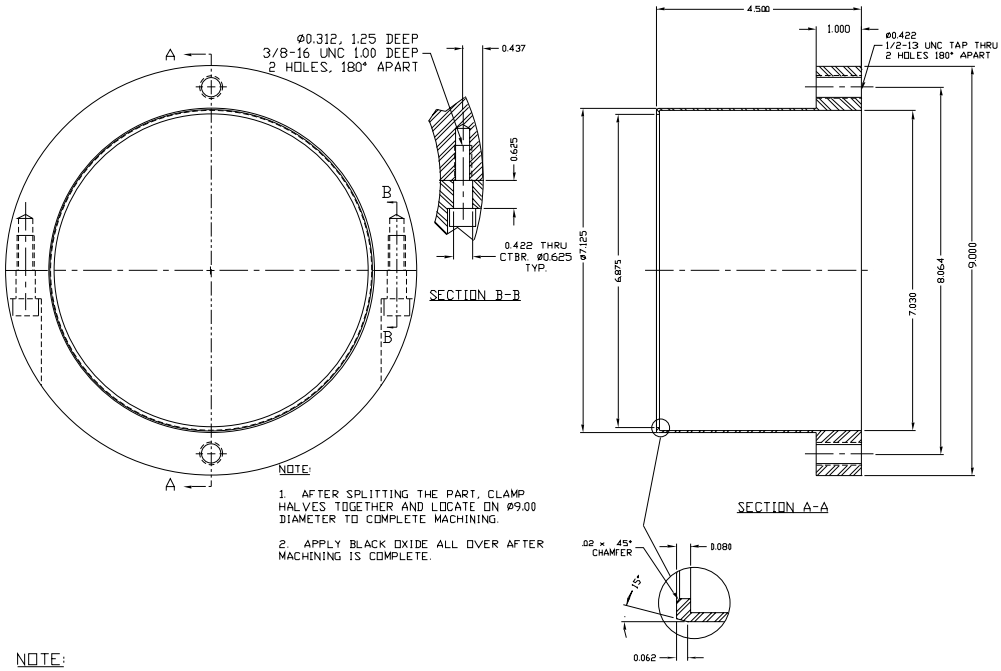

NOTE:

1. AFTER SPLITTING THE PART, CLAMP HALVES TOGETHER AND LOCATE ON Ø9.00 DIAMETER TO COMPLETE MACHINING.

2. APPLY BLACK OXIDE ALL OVER AFTER MACHINING IS COMPLETE.

NOTE:

THIS TOOL IS INTENDED FOR REMOVING THE MECHANICAL SEAL ROTATING ASSEMBLY (JOHN CRANE CO. PART NOS. H73621-01-3 THROUGH H73621-01-11)

CAUTION:

THE SEAL IS EXTREMELY FRAGILE AND MUST BE HANDLED CAREFULLY AT ALL TIMES. DO NOT REMOVE PROTECTIVE WRAPPING FROM THE SEAL OR SEAL COMPONENTS UNTIL JUST BEFORE INSTALLATION. DO NOT REST THE SEAL SEAT ON UNEVEN SURFACES.

DO NOT UNDER ANY CIRCUMSTANCES HAMMER, POUND, OR OTHERWISE APPLY SHOCK TO THIS TOOL WHEN REMOVING THE ROTATING ASSEMBLY. USE STEADY, BALANCED PRESSURE APPLIED BY THE SCREWS.

ALL MECHANICAL SEAL WORK MUST BE PERFORMED IN A CLEAN AND DRY ENVIRONMENT TO ASSURE RELIABLE SERVICE OF THE SEAL.

DET.	REQ.	MAT.	DESCRIPTION	STOCK SIZE
1	1	PUR	EXTRACTOR	Ø9.00 x 4.50
2	2	MS	SHCS	3/8-16 UNC x 1.25

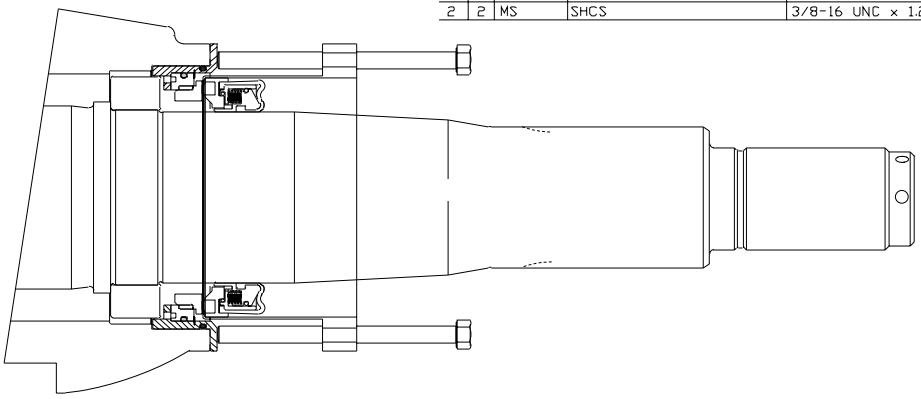

Forward (Seal) Seat Extractor — T-18050-745

NOTE:
THIS TOOL IS INTENDED FOR REMOVING THE MECHANICAL SEAL SEAT INSERT (JOHN CRANE CO. PART NO. H73621-01-1-1).

CAUTION:
THE SEAT IS EXTREMELY FRAGILE AND MUST BE HANDLED CAREFULLY AT ALL TIMES. DO NOT REMOVE PROTECTIVE WRAPPING FROM THE SEAT UNTIL JUST BEFORE INSTALLING IT. DO NOT REST THE SEAT ON UNEVEN SURFACES.

DO NOT UNDER ANY CIRCUMSTANCES HAMMER, POUND, OR OTHERWISE APPLY SHOCK TO THIS TOOL WHEN REMOVING THE SEAT. USE STEADY, BALANCED PRESSURE APPLIED BY THE SCREW, NUT, OR OTHER AXIAL FORCE.

ALL MECHANICAL SEAL WORK MUST BE PERFORMED IN A CLEAN AND DRY ENVIRONMENT TO ASSURE RELIABLE SERVICE OF THE SEAL

4	1	ALUMINUM	SHAFT	[illegible] x [illegible]
3	1	PURCHASE	ROD, THREADED	1/2-20 UNC x 12.00
2	1	UHMW-PE	SPACER	[illegible] x 1.00
1	2	PURCHASE	NUT TOOL [illegible]	1/2-20 UNC
DETAIL	QTY	MATERIAL	DESCRIPTION	STOCK SIZE

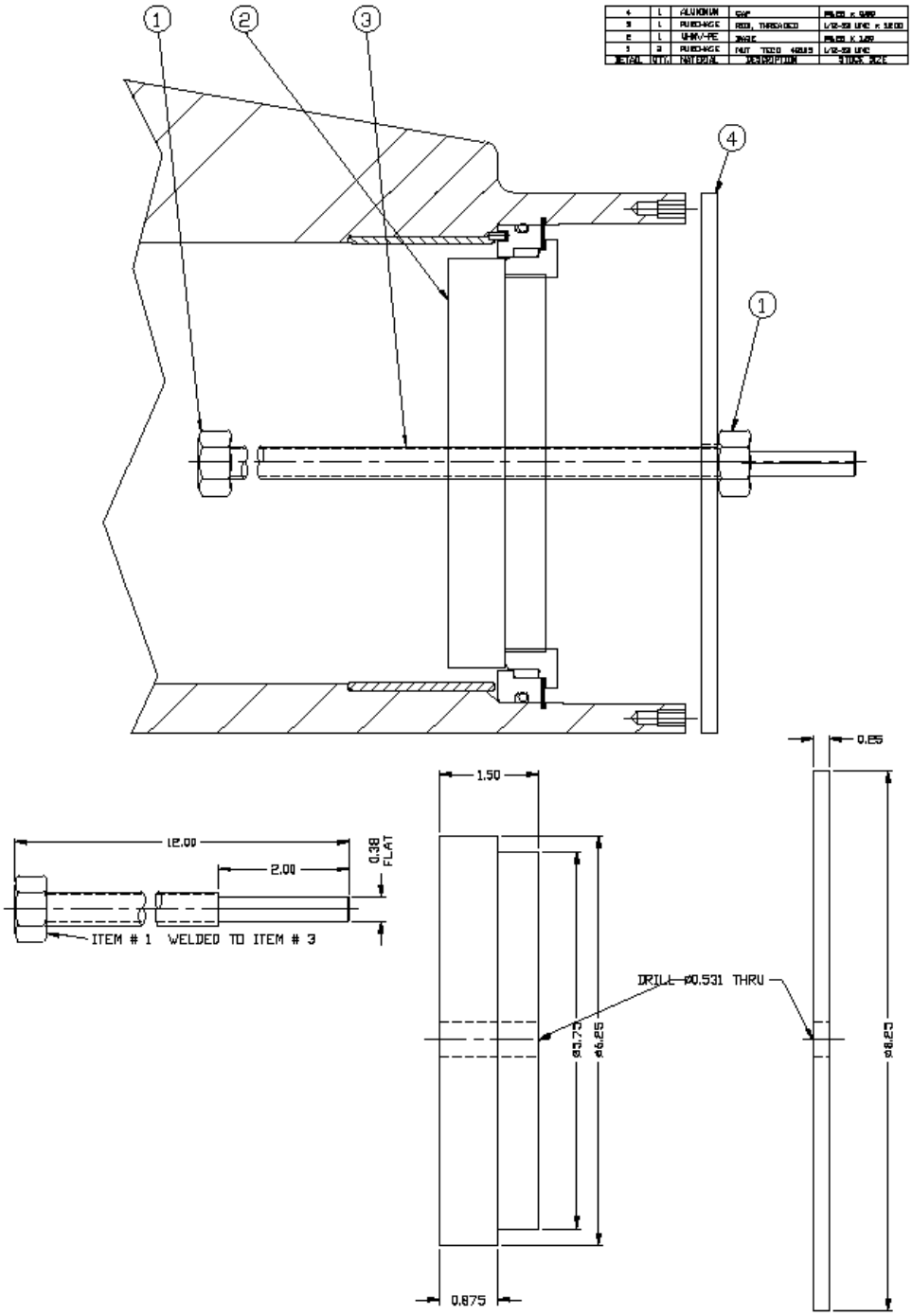

Driver, Mechanical Seal Sleeve — T-18050-789

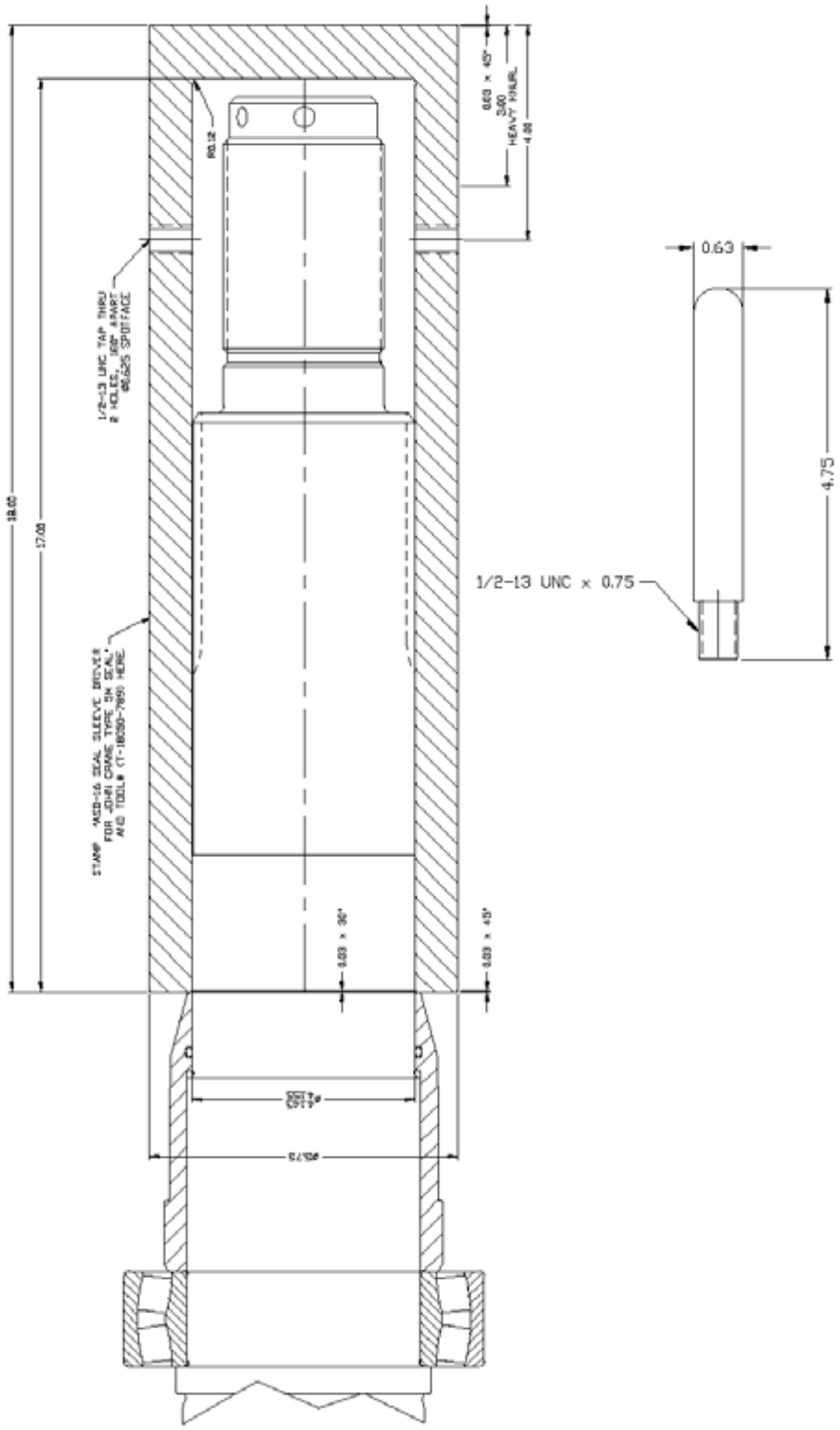

Propeller Shaft Indicator Holder — T-18050-746

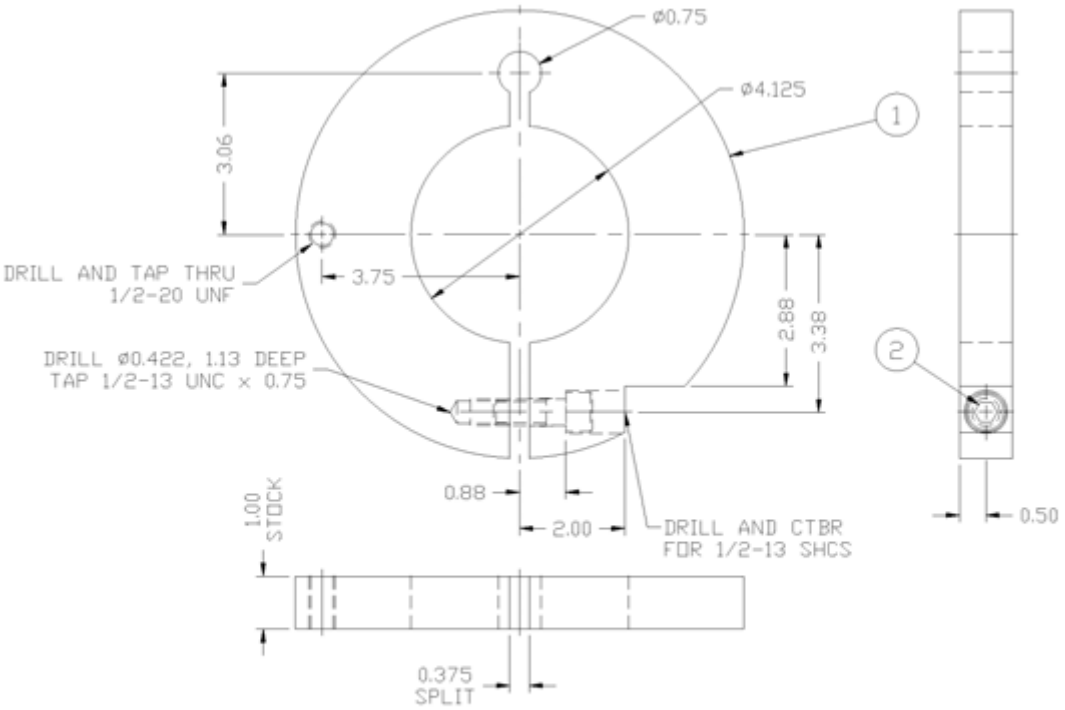

DET.	REQ.	MATERIAL	DESCRIPTION	STOCK SIZE
3	1	PURCHASE	SPLIT COLLAR STARRET 255C38	NOT SHOWN
2	1	PURCHASE	SHCS MACH. FAC. 07950	1/2-13 UNC x 1.50
1	1	ALUMINUM	INDICATOR HOLDER	ø8.50 x 1.00

Socket Shaft Indicator Holder — T-18050-747

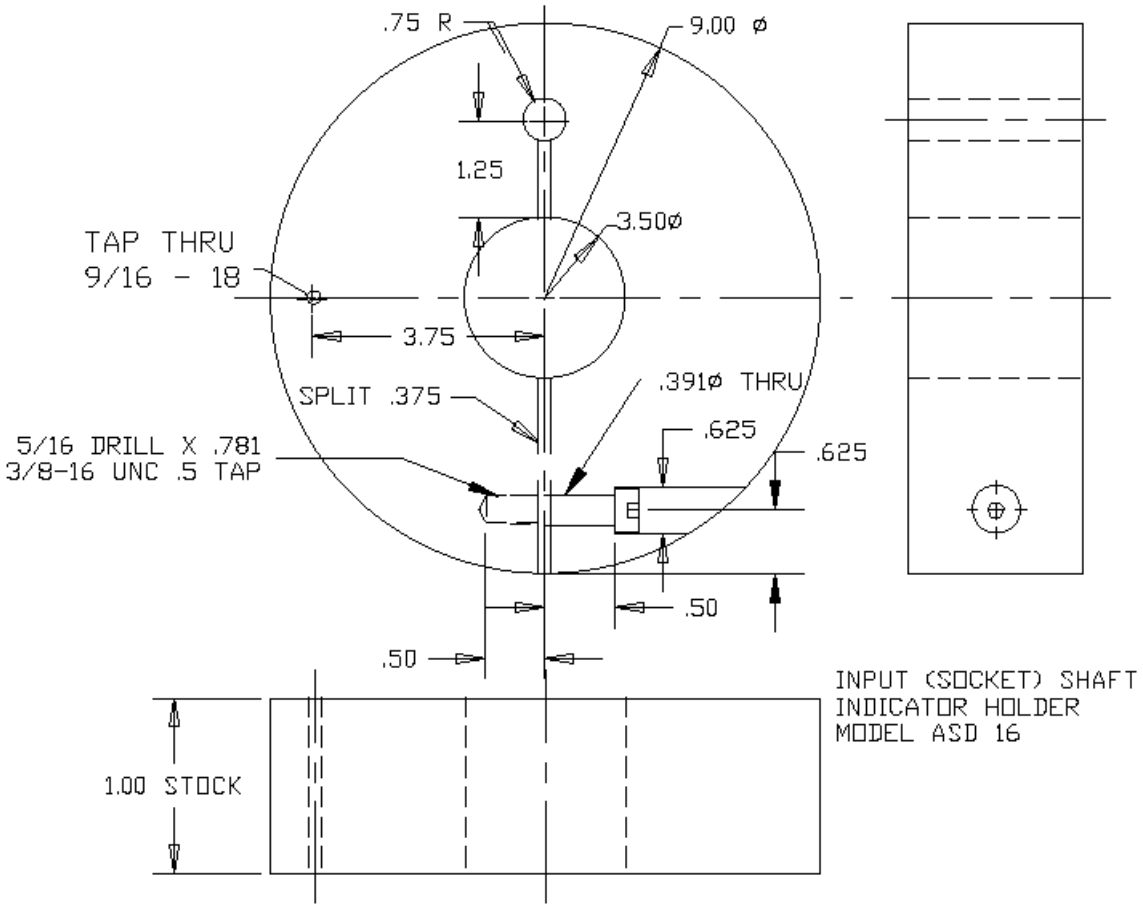

High Pressure Seal Driver — T-21549-27

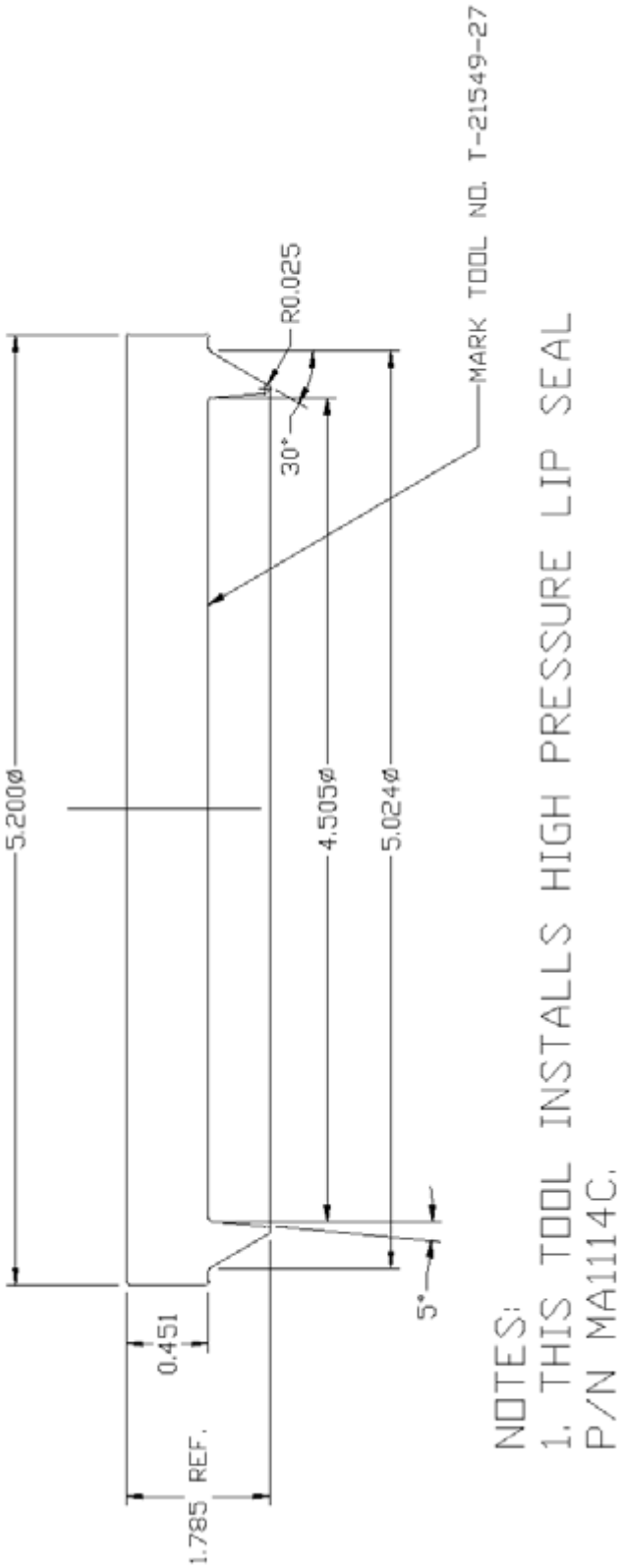

Wear Sleeve Installation Tool — T-18050-644

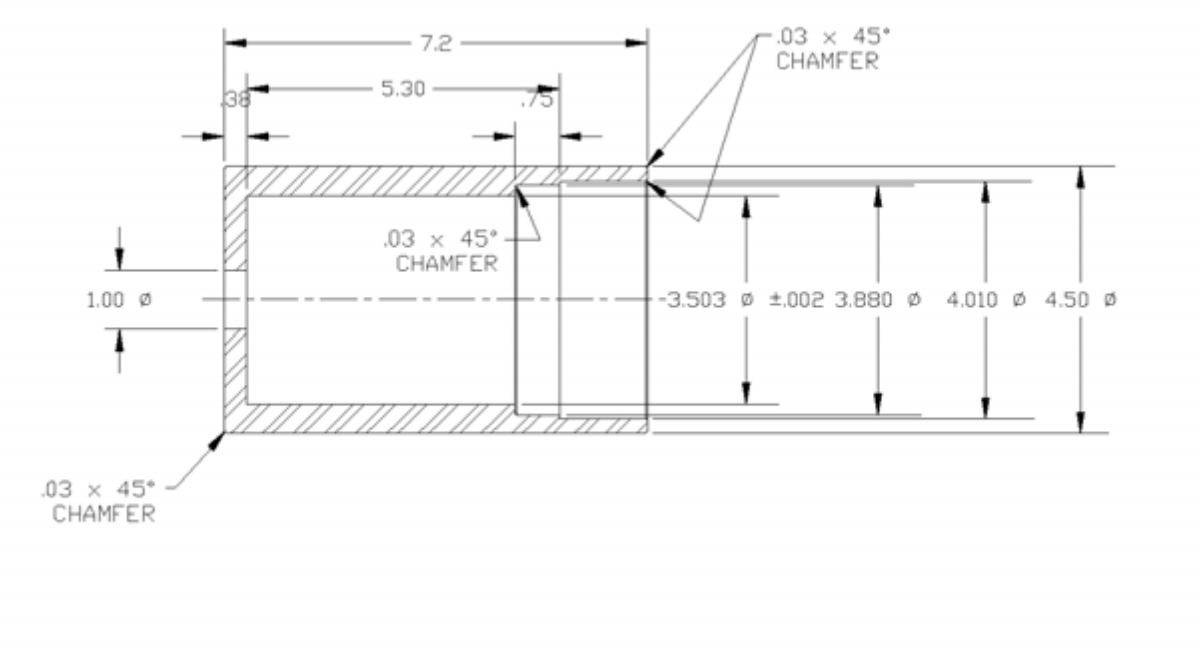

Propeller Shaft Lifting Adapter — T-21172-4

NOTES.
1. MATERIAL: 4140 BAR STOCK
2. BREAK SHARP CORNERS

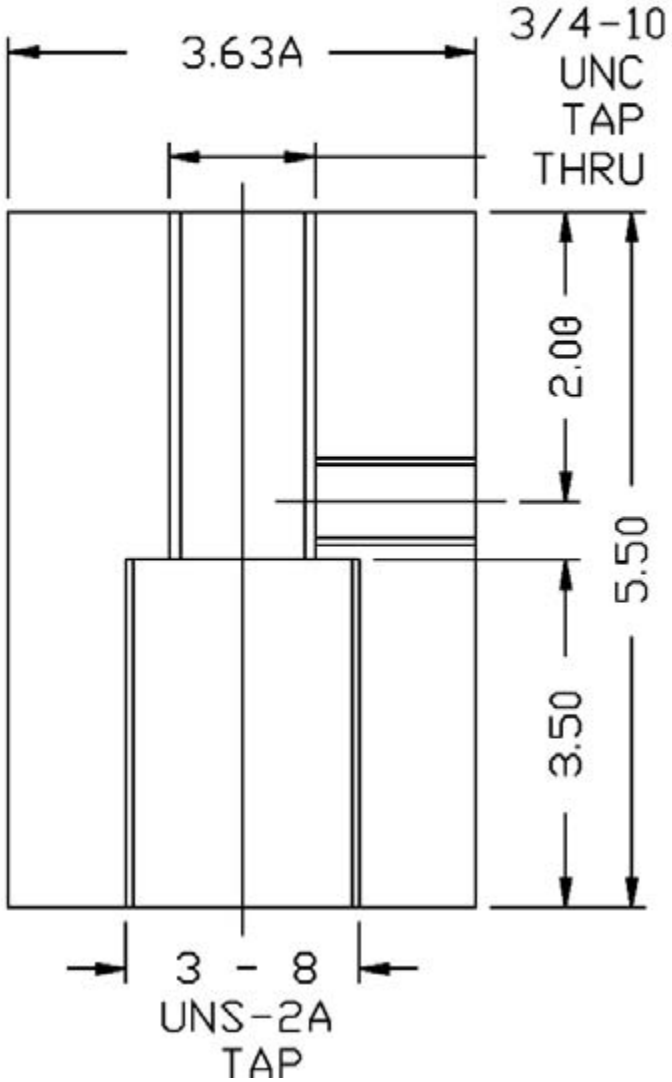

Thrust Ball Lifting Tool — T-22013-5A (top view)

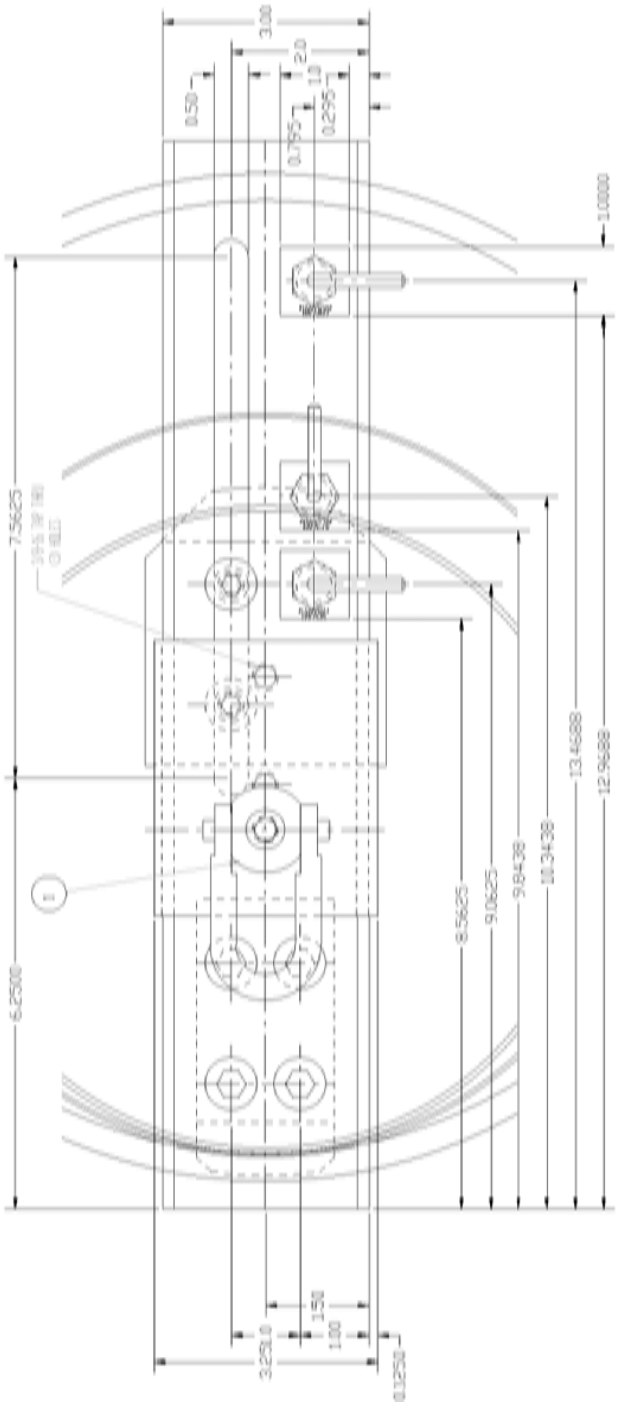

Thrust Ball Lifting Tool — T-22013-5A (side view)

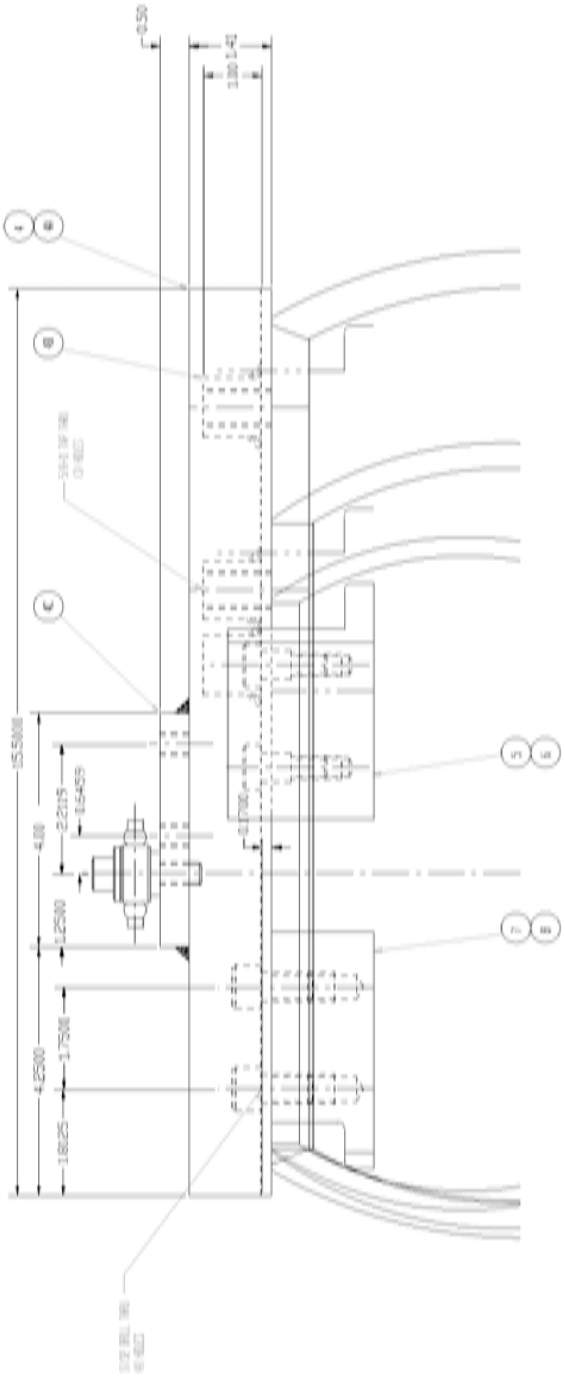

Thrust Ball Lifting Tool — T-22013-5B

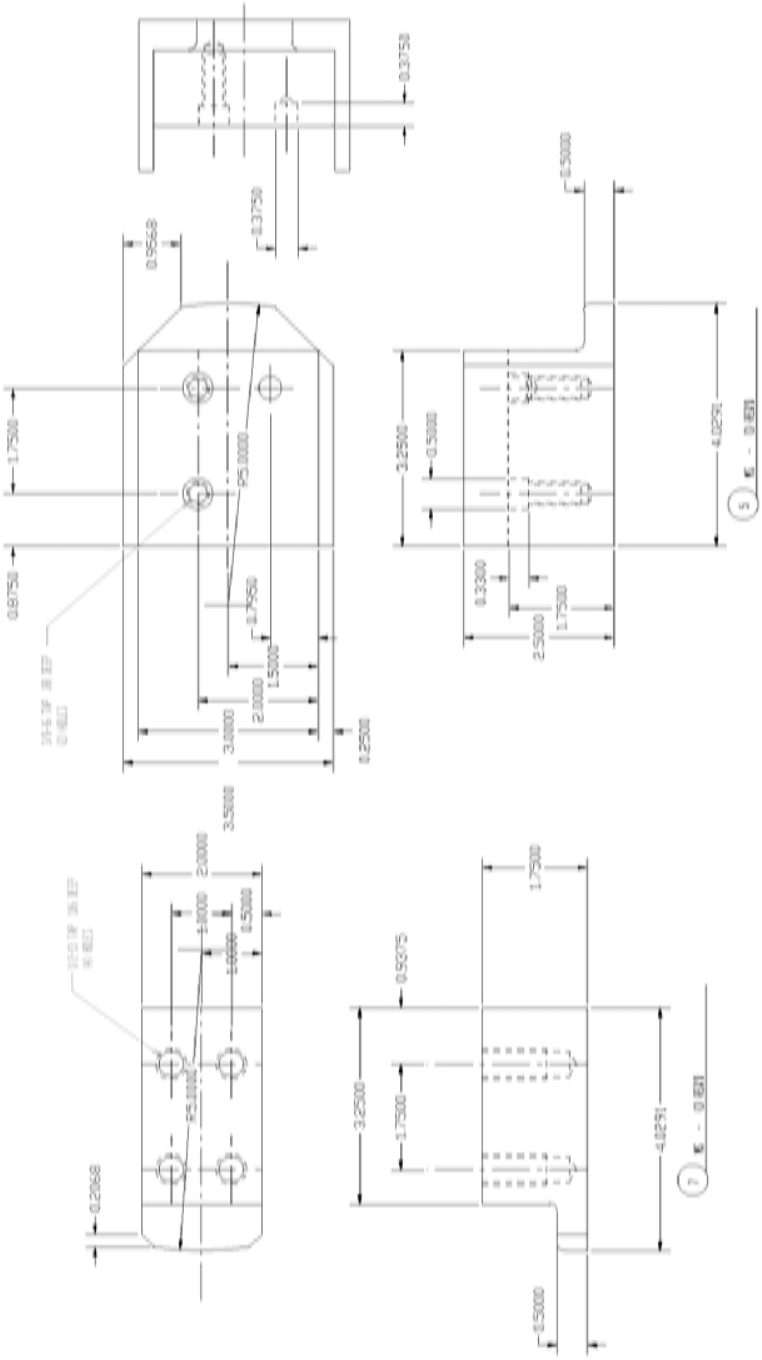

Thrust Bearing Sleeve Insertion Tool T-18050-792

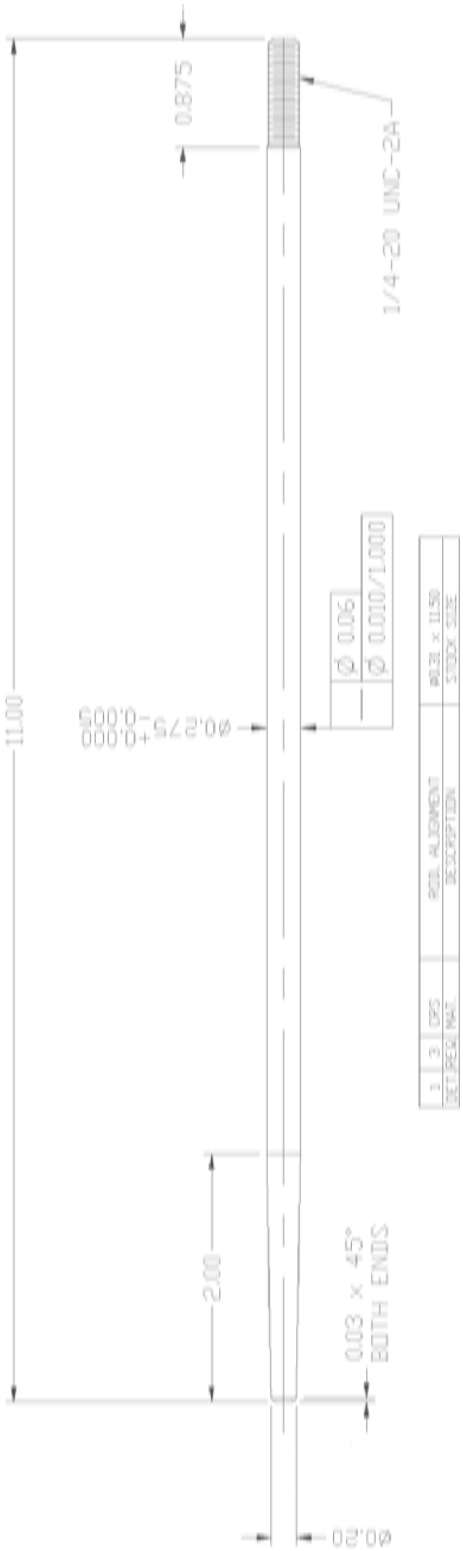

Propeller Bearing Sleeve Insertion Tool -Inner T-18050-793

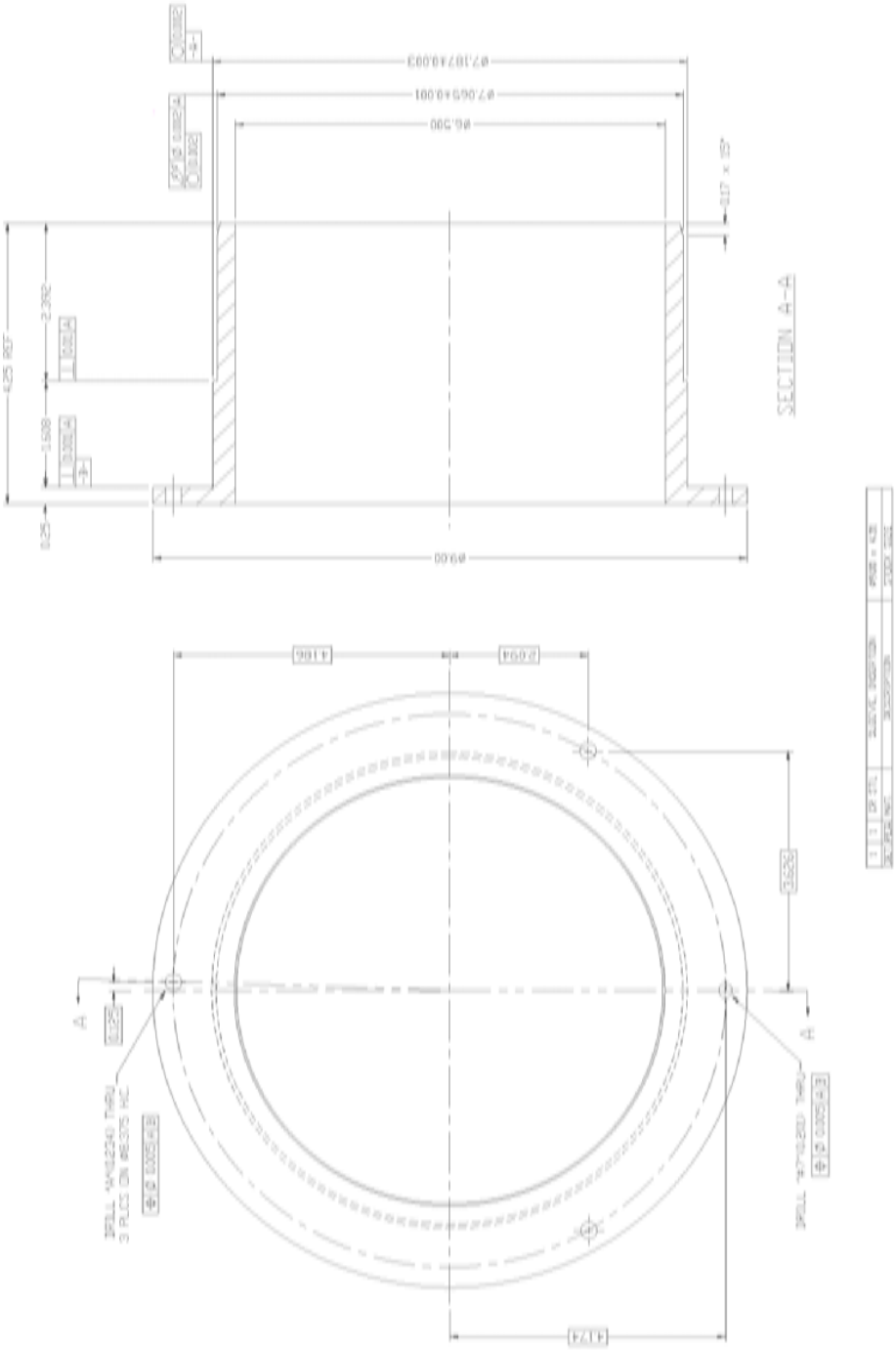

Propeller Bearing Sleeve Insertion Tool -Outer T-18050-794

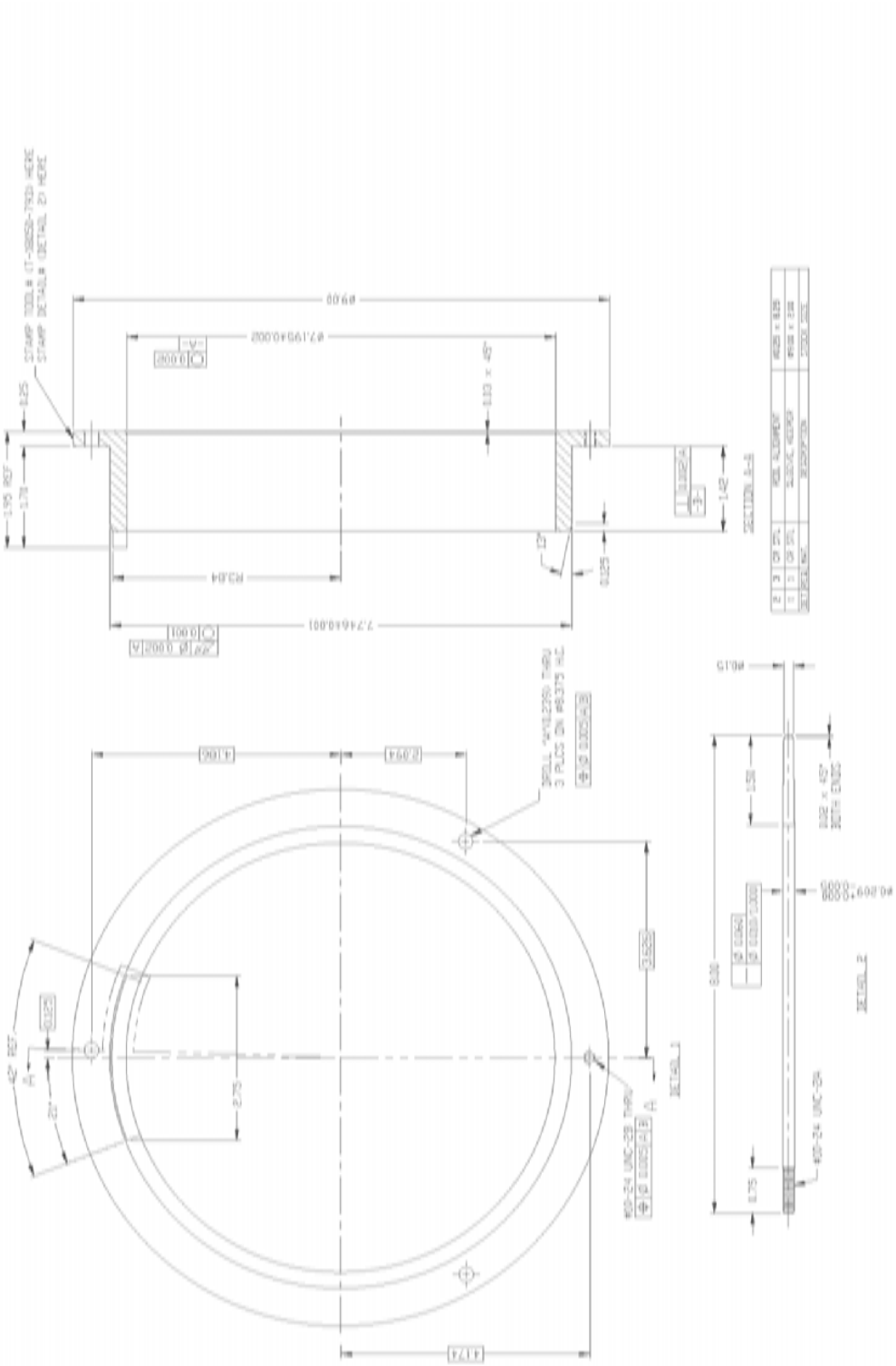

Assembly Stand Installation Arrangement T-21090 (1 of 2)

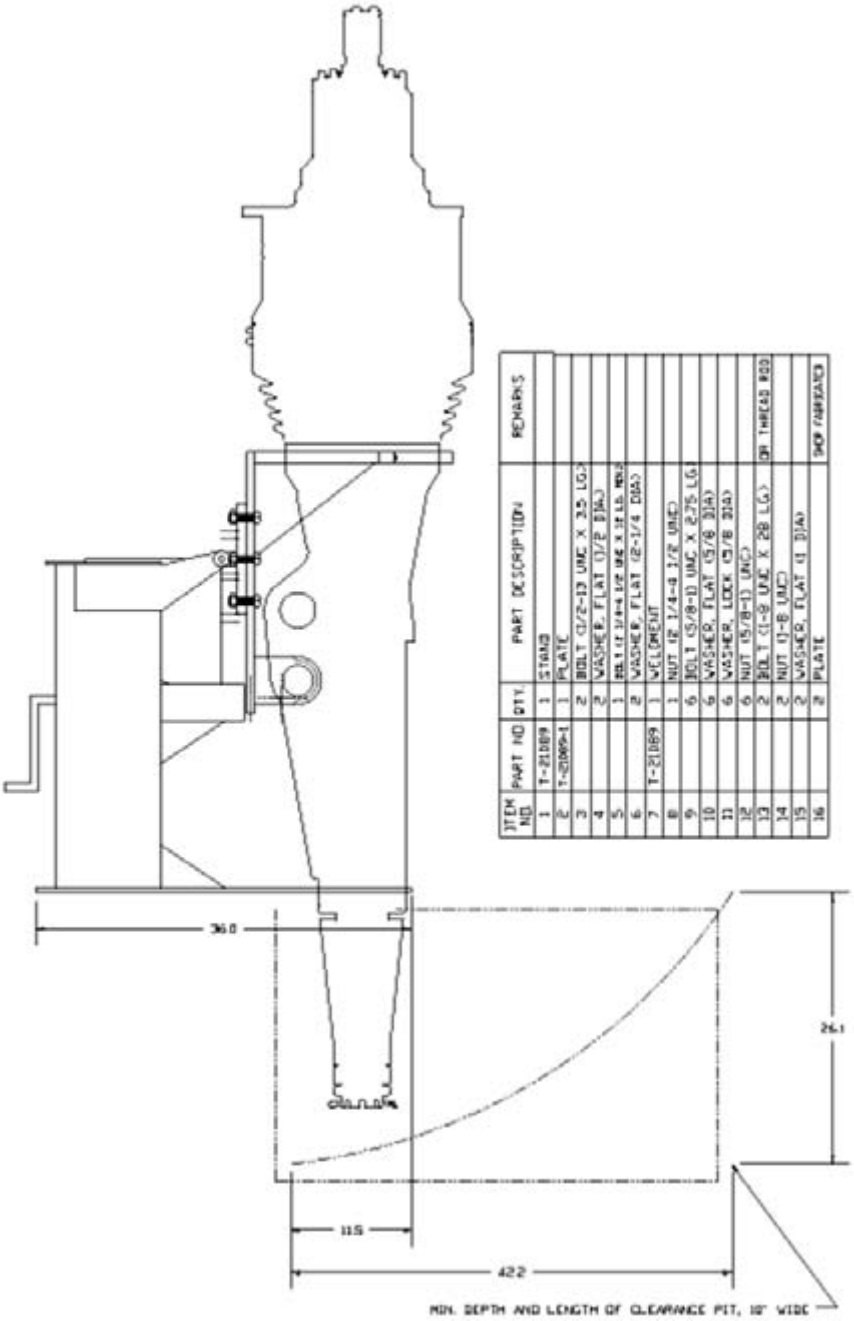

ITEM NO	PART NO	QTY	PART DESCRIPTION	REMARKS
1	T-21089	1	STAND	
2	T-21089-1	1	PLATE	
3		2	BOLT (1/2-13 UNC X 3.5 LG)	
4		2	WASHER, FLAT (1/2 DIA)	
5		1	BOLT (3/4-10 UNC X 18 LG, MIN)	
6		2	WASHER, FLAT (2-1/4 DIA)	
7	T-21089	1	WELDMENT	
8		1	NUT (2 1/4-4 1/2 UNC)	
9		6	BOLT (5/8-11 UNC X 2.75 LG	
10		6	WASHER, FLAT (5/8 DIA)	
11		6	WASHER, LOCK (5/8 DIA)	
12		6	NUT (5/8-11 UNC)	
13		2	BOLT (1-8 UNC X 28 LG)	ON THREAD ROD
14		2	NUT (1-8 UNC)	
15		2	WASHER, FLAT (1 DIA)	
16		2	PLATE	SHOP FABRICATED

Assembly Stand Installation Arrangement T-21090 (2 of 2)

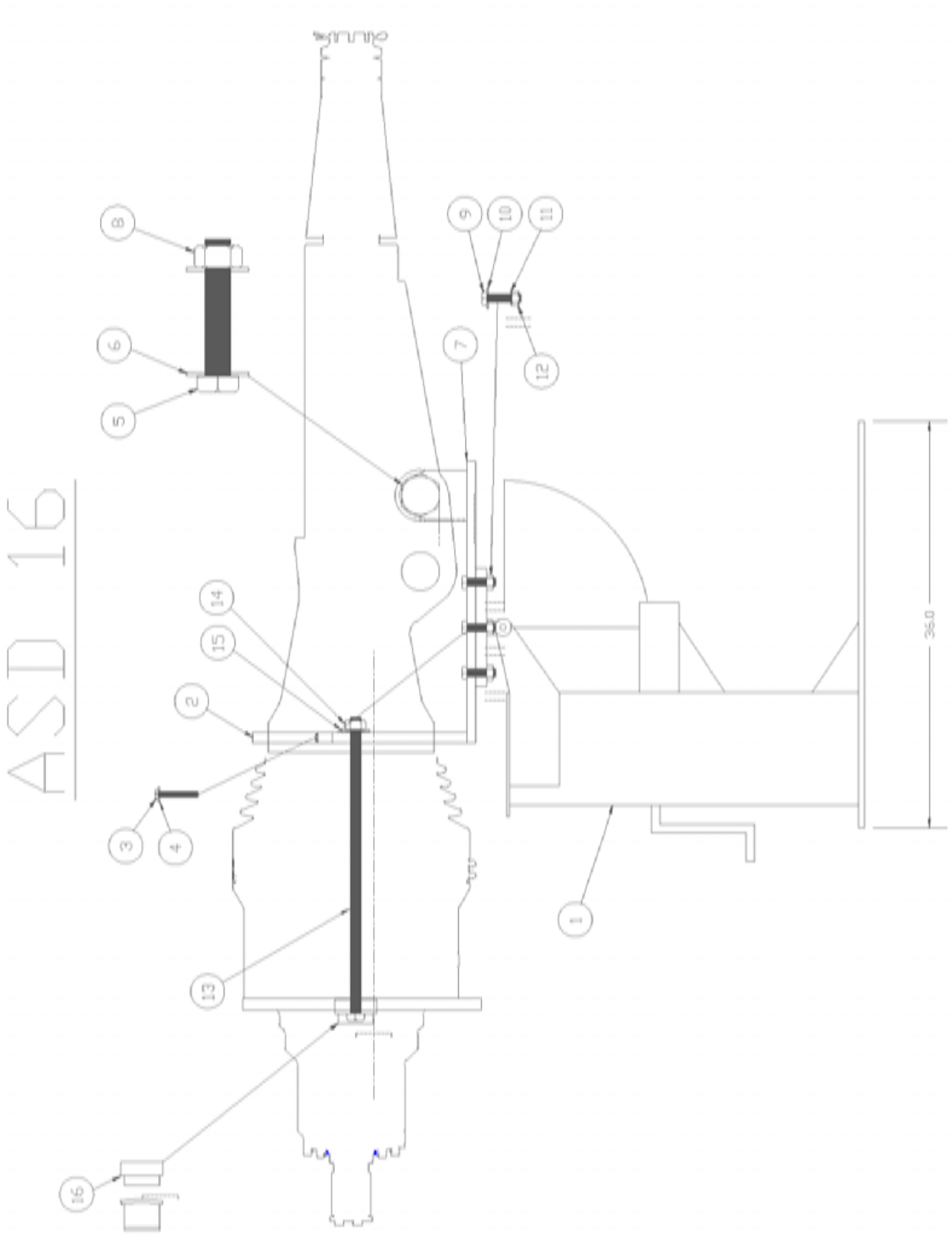

Assembly Stand Adapter Weldment T-21089 (side view)

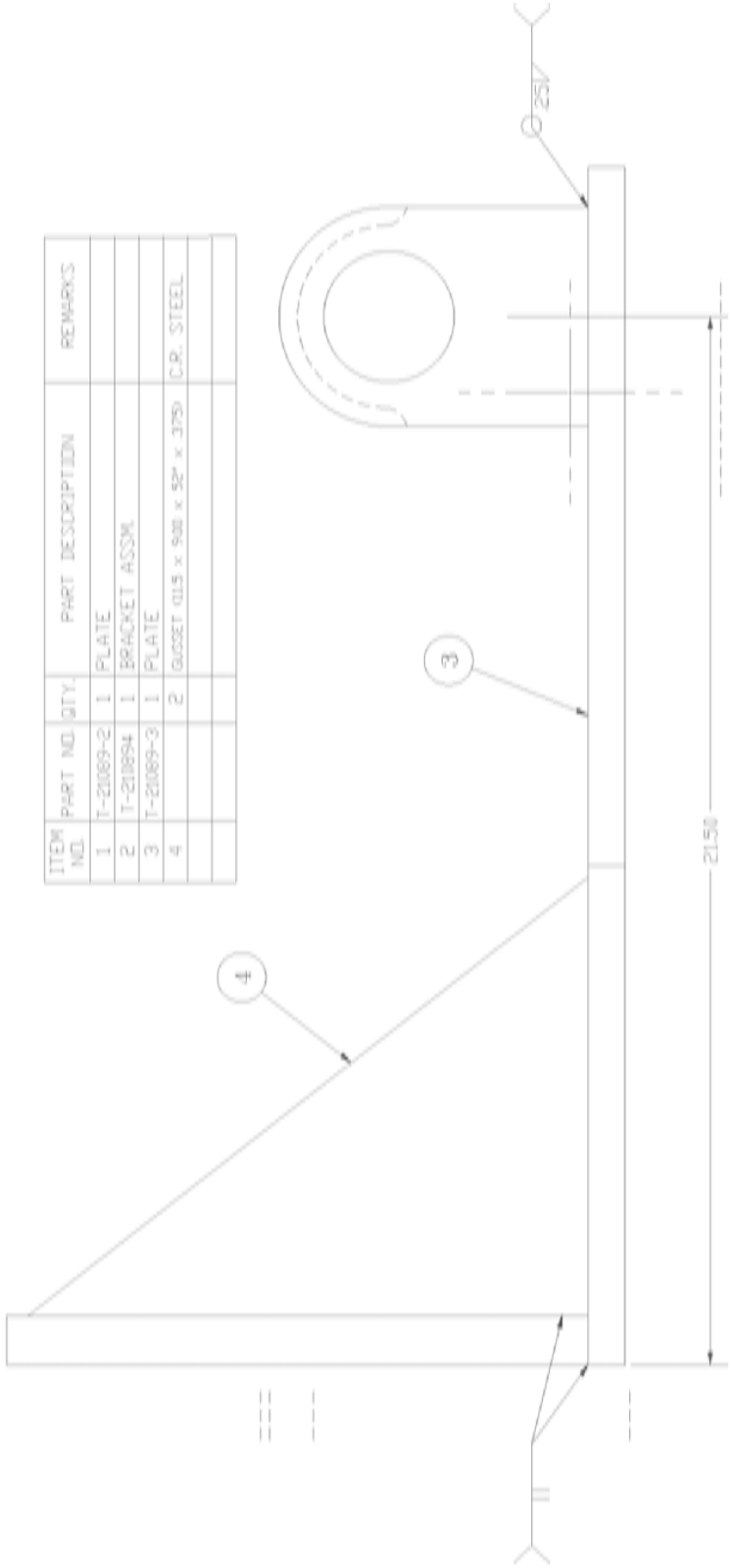

Assembly Stand Adapter Weldment T-21089 (end view)

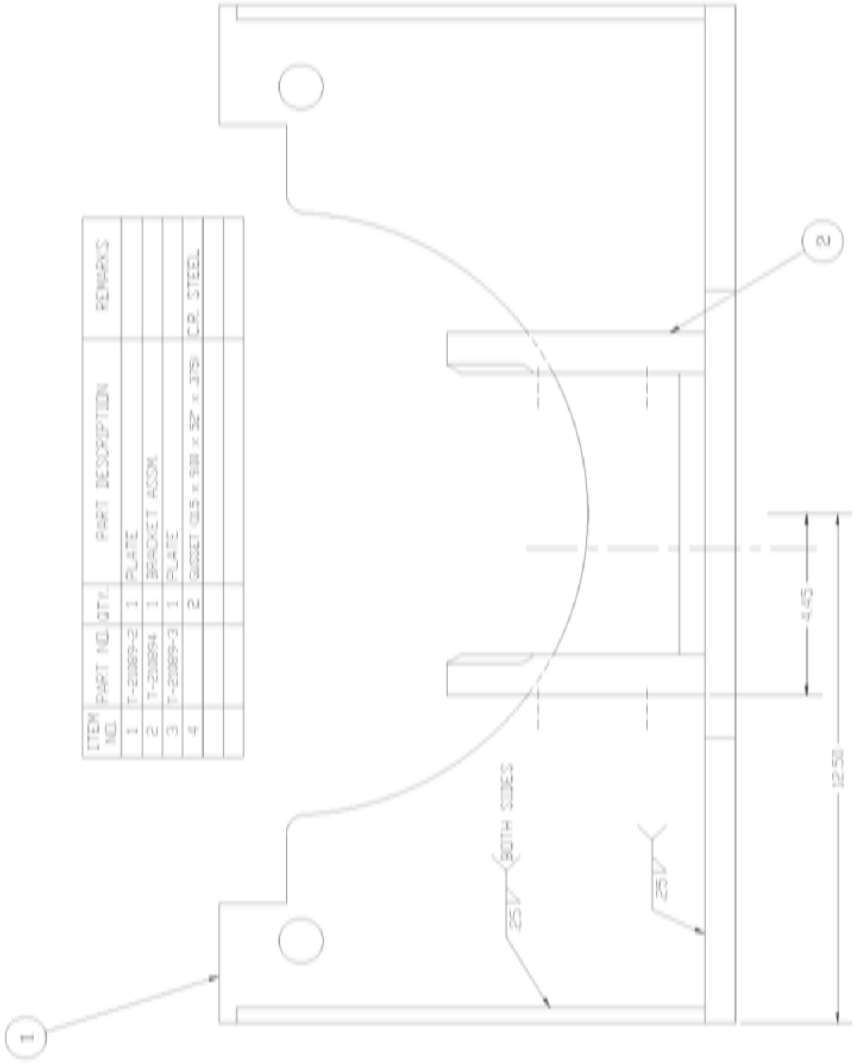

Assembly Stand Thrust Tube Clamp T-21089-1

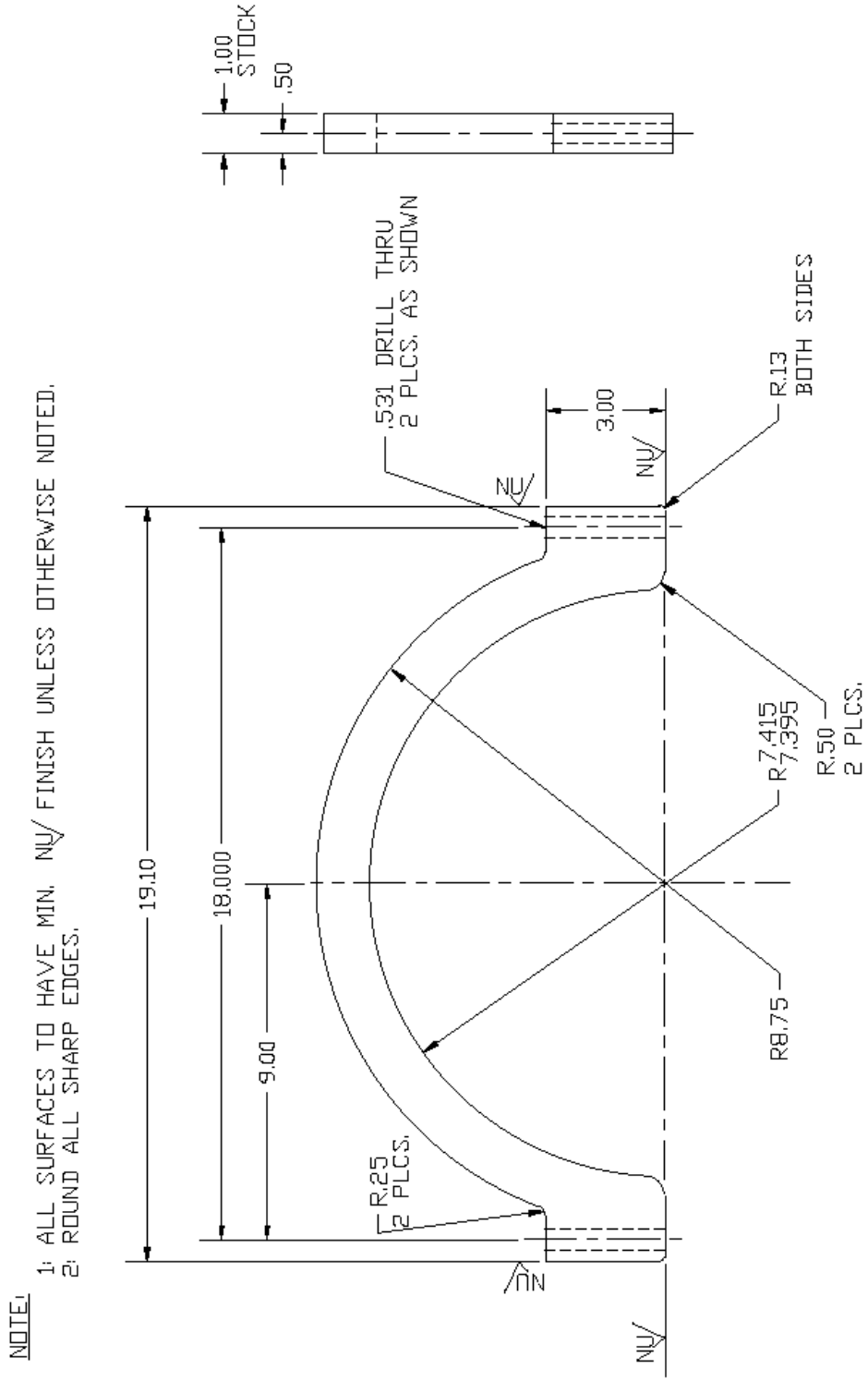

Assembly Stand Thrust Tube Cradle T-21089-2

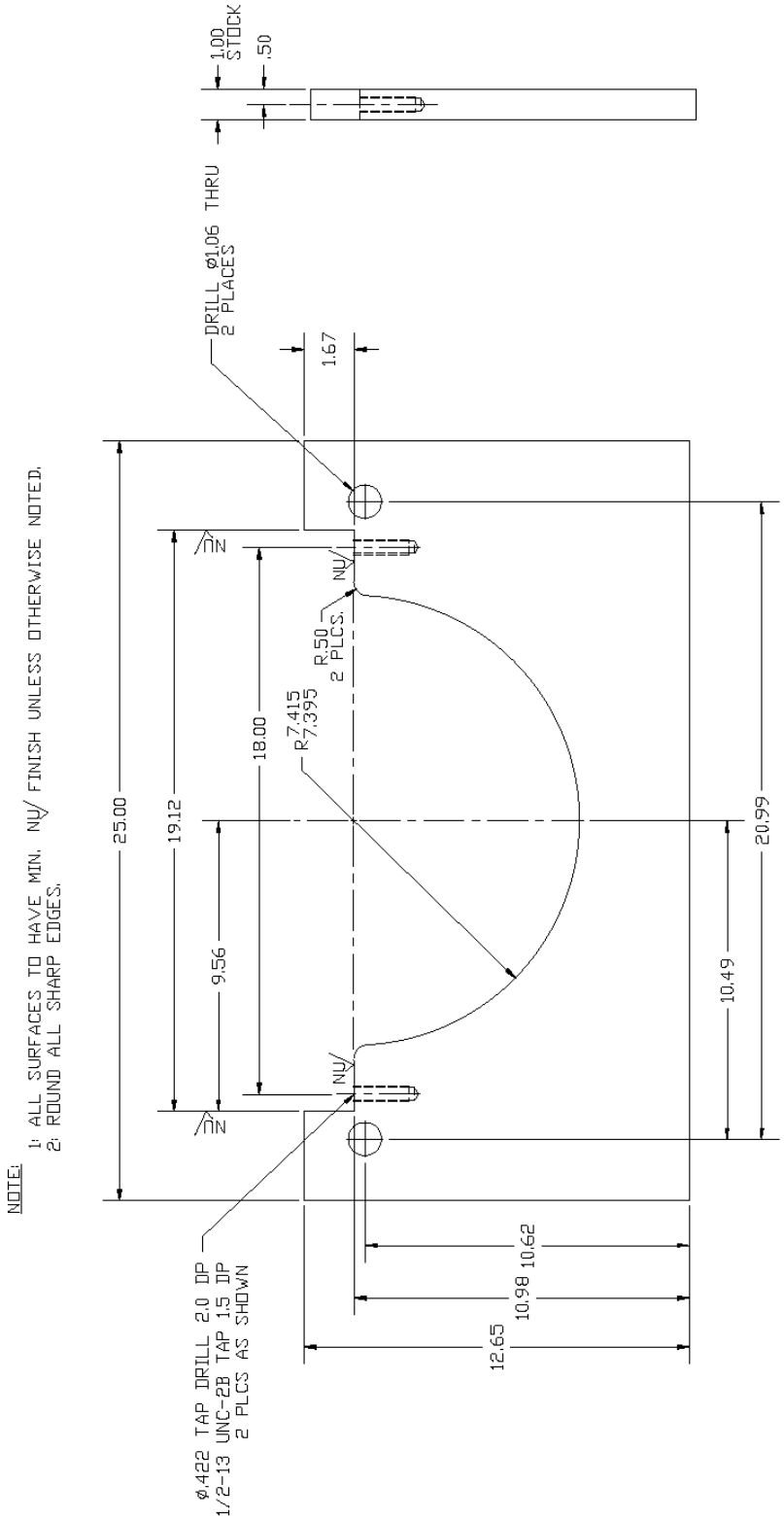

Assembly Stand Weldment Base T-21089-3

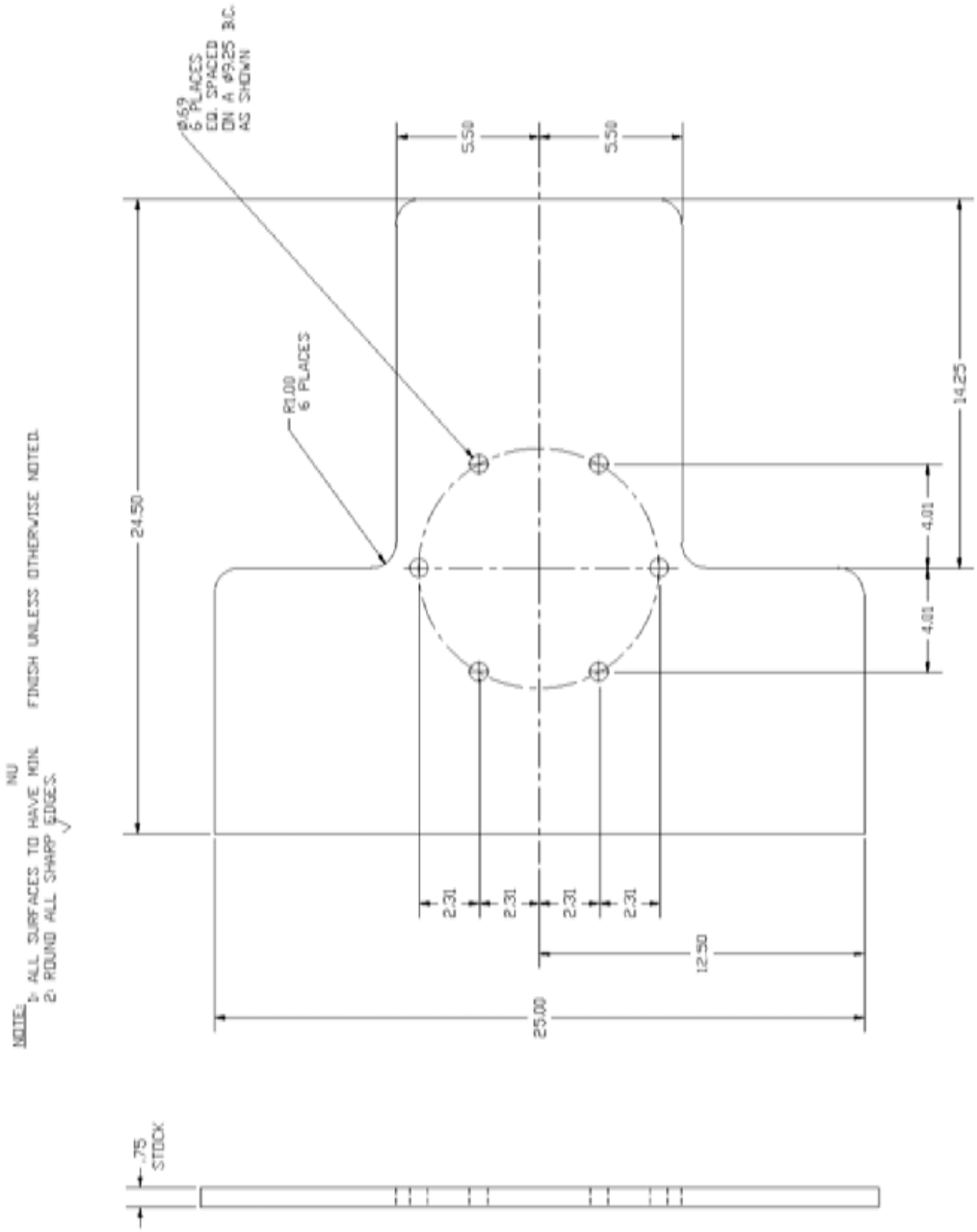

Assembly Stand Bracket Assembly T-21089-4

NOTE:
1: ALL SURFACES TO HAVE MIN. √ FINISH UNLESS OTHERWISE NOTED.
2: ROUND ALL SHARP EDGES.

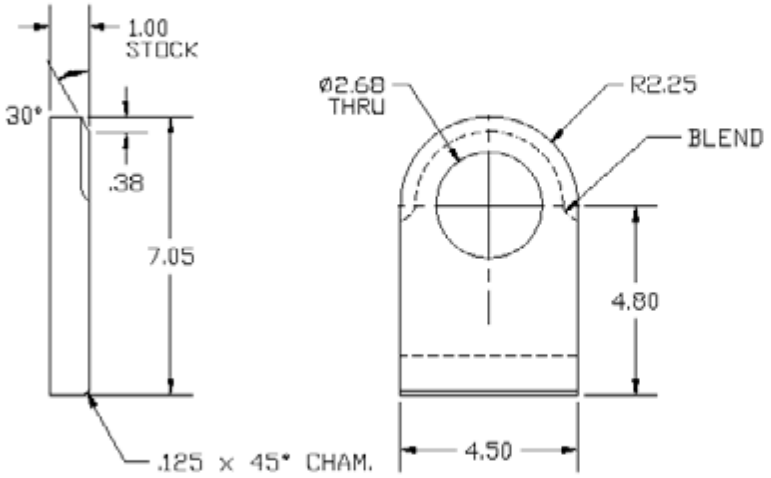

ITEM 1
2 REQ'D

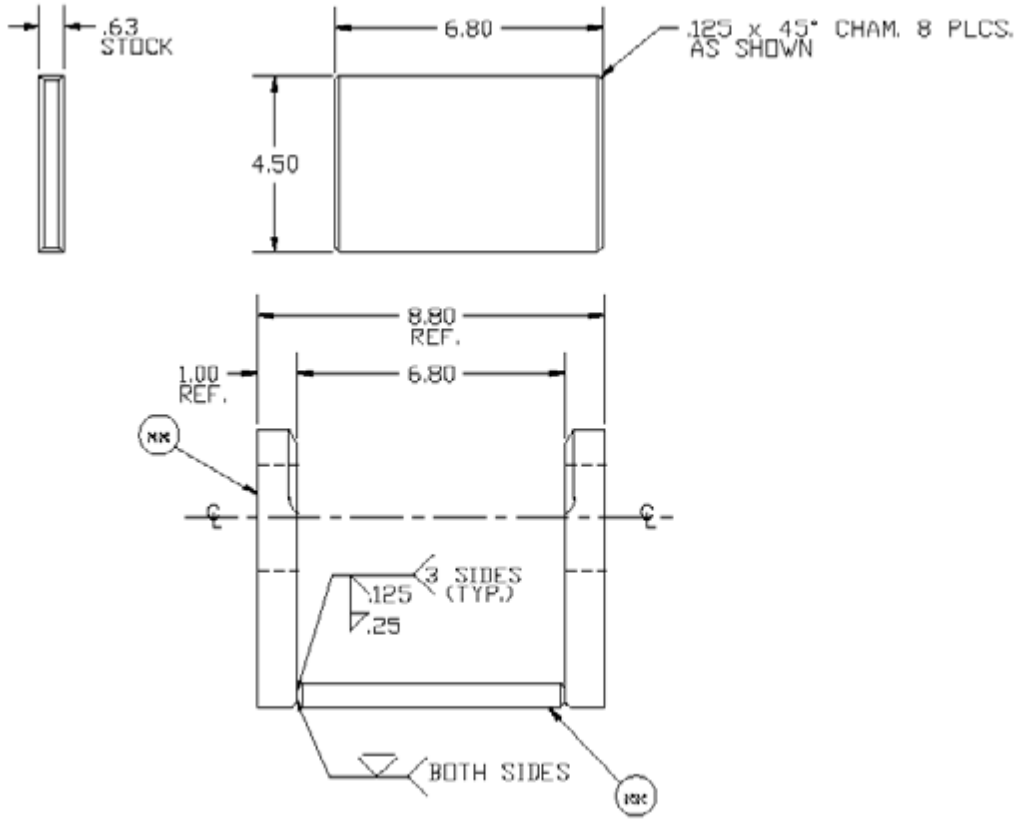

Engineering Drawings

List of Engineering Drawings

The following pages include the engineering drawings that are specific to this model. The engineering drawings included are listed below.

Note: Any part numbers listed in the following engineering drawings are for reference only. Please refer to your bill of material for part numbers specific to your model.

The following is a list of ASD16 Drive Configurations

Lip Seal – Original Configuration – Introduced in 1990 (*Discontinued - Service Parts Available)*

- ❑ 1007027-1 Drive Assembly Parts Drawing
- ❑ 1007027-2 Drive Assembly Notes

Mechanical Face Seal – Original “Retrofit” Version – Introduced in 1997 (*Discontinued - Service Parts Available)*

- ❑ 1007027A-1 Drive Assembly Parts Drawing
- ❑ 1007027A-2 Drive Assembly Notes

Mechanical Face Seal – Final Configuration – Introduced in 1998

- ❑ 1018683-1 Drive Assembly Parts Drawing
- ❑ 1018683-2 Drive Assembly Notes

Inconel Propeller Shaft/Mechanical Seal – Introduced in 1998

- ❑ 1018347-1 Drive Assembly Parts Drawing
- ❑ 1018347-2 Drive Assembly Notes

Lip Seal – New Configuration – Introduced in 2003

- ❑ 1021245-1 Drive Assembly Parts Drawing
- ❑ 1021245-2 Drive Assembly Notes

Lip Seal Assembly with DIN 100 mm U-Joint Spline – Introduced in 2007

- ❑ 1022954-1 Drive Assembly Parts Drawing
- ❑ 1022954-2 Drive Assembly Notes

Large Propeller Taper – SAE U-joint Spline – Introduced in 2003

- ❑ 1020764-1 Drive Assembly Parts Drawing
- ❑ 1020764-2 Drive Assembly Notes

Large Propeller Taper – DIN 90 mm U-joint Spline – Introduced in 2004

- ❑ 1021361-1 Drive Assembly Parts Drawing
- ❑ 1021361-2 Drive Assembly Notes

The following drawings are in effect for all ASD16 drive versions

- ❑ 1011039 Installation Drawing
- ❑ 1006631 Hole Drilling Template for Drive-to-Transom Fasteners
- ❑ 1006580 Steering Cylinder Assembly
- ❑ 1006719 Steering Cylinder Installation Layout
- ❑ 1006581 Trim Cylinder Assembly
- ❑ 1006720 Trim Cylinder Installation Layout
- ❑ 1007424 Tie Bar Assembly
- ❑ 1005108 Mechanical Face Seal – Original, Introduced 1997
- ❑ 1020800 Mechanical Face Seal – Direct shaft mount, Introduced 2003
- ❑ 1025928 ASD Installation

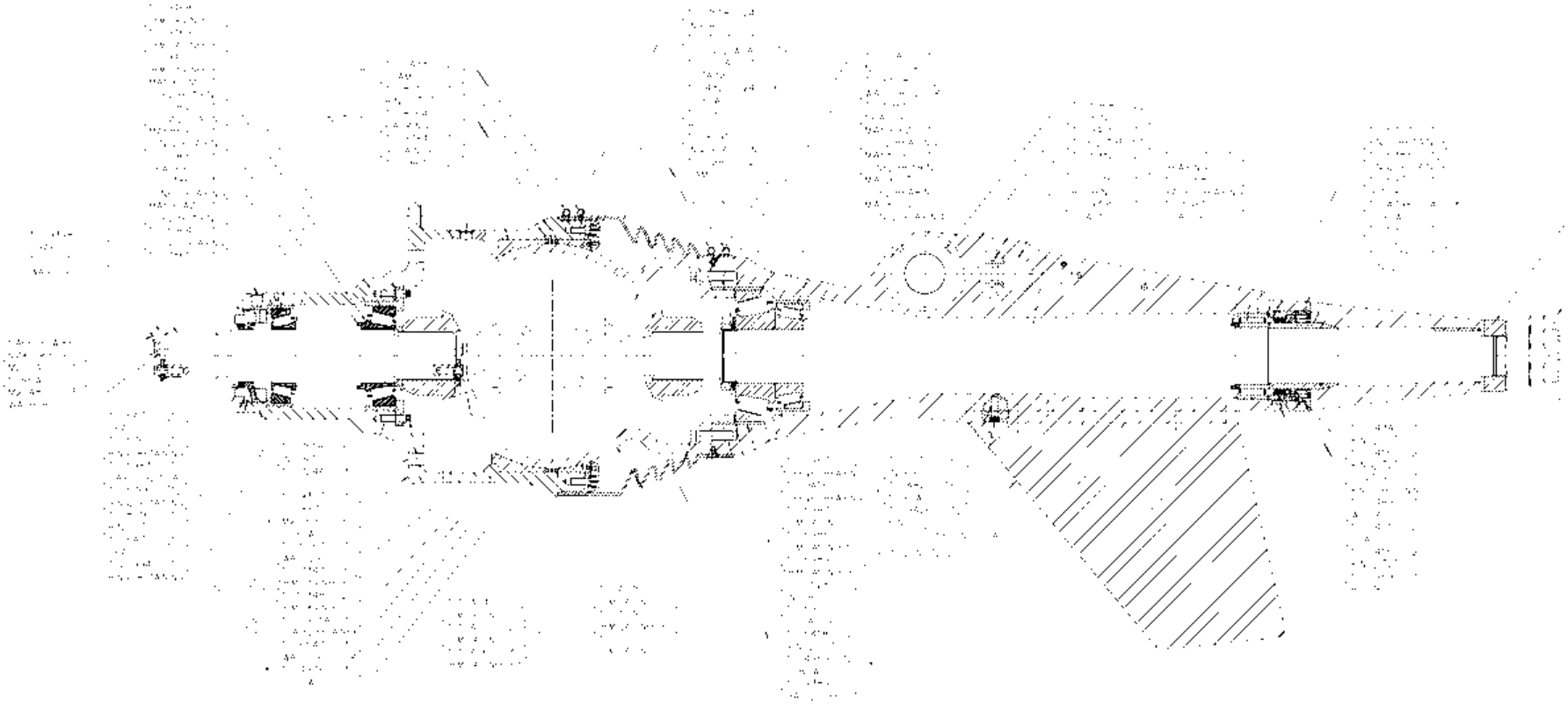

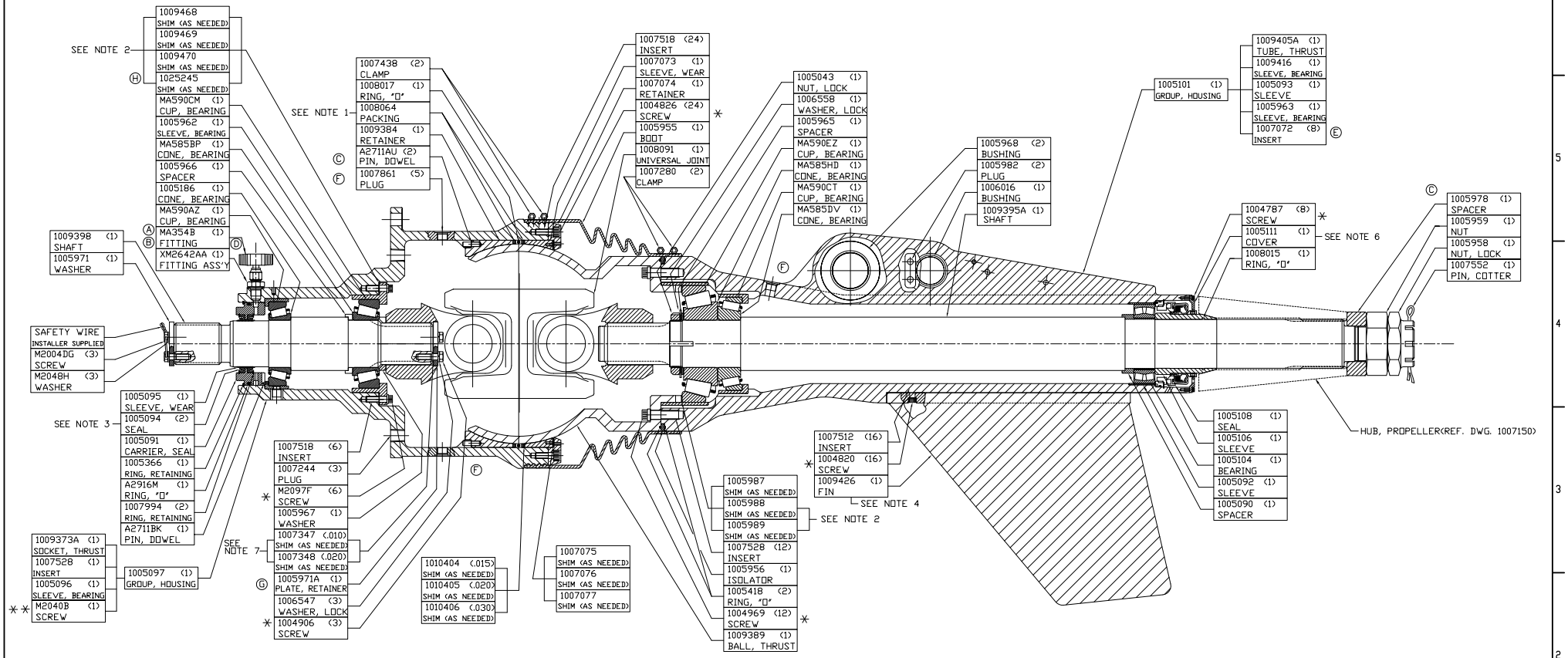

OBSOLETE
FOR SERVICE ONLY

NOTE:
RETROFIT UNIT:
INCORPORATES NEW MAIN SHAFT SEAL AS FOLLOWS:
MECHANICAL FACE SEAL:
JOHN CRANE TYPE 5M,
DWG. N73621-01

cad file 107027A1

THIRD ANGLE PROJECTION
SIMILAR TO 1007027

SHT.NO.	REV	ZONE	CH. NO.	DATE	SHT.NO.	REV	ZONE	CH. NO.	DATE
					1&2	F	E3 E5	29623	9-30-99
					1&2	E	B4	28839	10-1-98
					1&2	D	F4	28828	10-1-98
					1&2	C	VAR.	28514	4/22/98
	H	F6	ECNWF-20530	06/19/09	1	B	F4	28228	11/18/97
	G	E2	ECN14854	06/11/07	1	A	F4	28169	10/22/97

MATERIAL
HEAT TREAT
SURFACE TREATMENT
WEIGHT LBS. | WR² LBS. IN²
FIRST USE
ASSY. MODEL ASD-16
NAME DRIVE ASS'Y
UNLESS OTHERWISE SPECIFIED
MACHINED DIMENSIONS
X.X ±0.030
X.XX ±0.010
X.XXX ±0.005
ALL ANGULAR TOLERANCES ±1°
GEOMETRIC TOLERANCING PER ANSI Y14.5M 1982
DATE 7/11/97
SCALE 1:4
DRN. J.K.
CHK. GAM
APP'D. GAM

TWIN DISC INCORPORATED
RACINE, WI 53403 - USA

1007027A

SHEET 1 OF 2 REV H

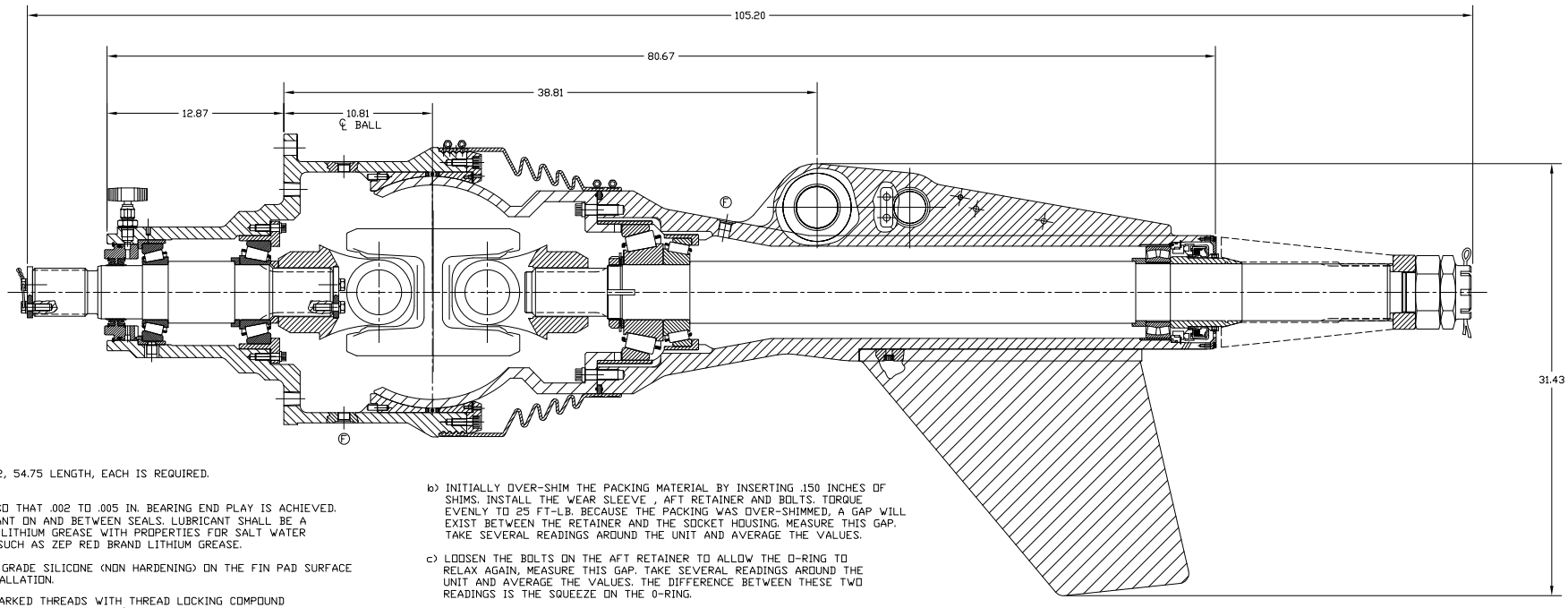

NOTES:

1) PACKING, QTY 2, 54.75 LENGTH, EACH IS REQUIRED.

© 2) STACK SHIMS SO THAT .002 TO .005 IN. BEARING END PLAY IS ACHIEVED.

3) APPLY LUBRICANT ON AND BETWEEN SEALS. LUBRICANT SHALL BE A MARINE GRADE LITHIUM GREASE WITH PROPERTIES FOR SALT WATER ENVIRONMENT SUCH AS ZEP RED BRAND LITHIUM GREASE.

4) APPLY MARINE GRADE SILICONE (NON HARDENING) ON THE FIN PAD SURFACE PRIOR TO INSTALLATION.

5) COAT THE * MARKED THREADS WITH THREAD LOCKING COMPOUND 242 OR 742 (BLUE< SEMI-PERMANENT).

COAT THE * * MARKED THREADS WITH THREAD LOCKING COMPOUND 270 (RED, PERMANENT).

USE ALL APPLICABLE SOLVENTS, PRIMERS, AND ACTIVATORS.

6) NOT USED.

7) SHIM FOR MINIMUM GAP UNDER 1005971A RETAINER PLATE.

8) SHIM PROCEDURE

WEAR SLEEVE

a) PLACE FORWARD RETAINER (1009384) INTO SOCKET HOUSING. ENSURE THE RETAINER IS SEATED FIRMLY AGAINST THE SHOULDER IN THE SOCKET.

b) THIS PROCEDURE IS TO SHIM THE WEAR SLEEVE (1007073) TO THE THRUST BALL (1009389). PLACE THE THRUST BALL INTO THE FORWARD RETAINER. INSTALL ENOUGH SHIMS (OVER SHIM THE AFT RETAINER) AS TO CREATE A GAP BETWEEN THE AFT RETAINER AND THE SOCKET HOUSING.

c) THE WEIGHT OF THE AFT RETAINER WILL CAUSE THE WEAR RING TO SEAT AS A LINE FIT TO THE BALL. BECAUSE THE AFT RETAINER WAS OVER SHIMMED, A GAP WILL EXIST BETWEEN THE RETAINER AND THE SOCKET HOUSING. MEASURE THIS GAP. TAKE SEVERAL READINGS AROUND THE UNIT AND AVERAGE THE VALUES.

d) REMOVE THE AMOUNT OF SHIMS EQUIVALENT TO OR THE NEXT SIZE LARGER THAN THE GAP MEASURED. FOR EXAMPLE, IF THE GAP MEASURED IS .115 INCHES, REMOVE .120 INCHES. THIS WILL CREATE A LINE FIT TO SLIGHTLY LOOSE BETWEEN THE WEAR SLEEVE AND THE BALL. THE WEAR SLEEVE HAS NOW BEEN SHIMMED PROPERLY TO THE BALL.

SEAL AND PACKING

a) REMOVE THE THRUST BALL FROM THE SOCKET. INSTALL THE PACKING, O-RING AND THEN PACKING OVER THE FORWARD RETAINER. NEXT, SHIMS ARE REQUIRED BETWEEN THE WEAR SLEEVE AND PACKING. THE GOAL IS TO OBTAIN THE PROPER SQUEEZE ON THE O-RING. THE PACKING IS NOT A RESILIENT MATERIAL, THEREFORE, ONCE COMPRESSED WILL MAINTAIN ITS SHAPE. PROPER SQUEEZE ON THE O-RING IS 10-15% OF THE CROSS SECTION WHICH IS .04 TO .06 INCHES.

b) INITIALLY OVER-SHIM THE PACKING MATERIAL BY INSERTING .150 INCHES OF SHIMS. INSTALL THE WEAR SLEEVE , AFT RETAINER AND BOLTS. TORQUE EVENLY TO 25 FT-LB. BECAUSE THE PACKING WAS OVER-SHIMMED, A GAP WILL EXIST BETWEEN THE RETAINER AND THE SOCKET HOUSING. MEASURE THIS GAP. TAKE SEVERAL READINGS AROUND THE UNIT AND AVERAGE THE VALUES.

c) LOOSEN THE BOLTS ON THE AFT RETAINER TO ALLOW THE O-RING TO RELAX AGAIN, MEASURE THIS GAP. TAKE SEVERAL READINGS AROUND THE UNIT AND AVERAGE THE VALUES. THE DIFFERENCE BETWEEN THESE TWO READINGS IS THE SQUEEZE ON THE O-RING.

EXAMPLE

A) .150 SHIMS ON THE PACKING, RETAINER BOLTS TORQUED TO 25 FT-LBS.— GAP=.030 AVG.
B) LOOSEN RETAINER BOLTS. — GAP=.110 AVG.
C) SQUEEZE ON O-RING. — SQUEEZE=.080

THE O-RING SQUEEZE SHOULD BE BETWEEN .040-.060. IN THIS EXAMPLE, 0.030 OF SHIM MATERIAL SHOULD BE REMOVED.

9) USE GRADE 8 S574 TORQUE VALUES UNLESS NOTED OTHERWISE.

10) LUBRICANT RECOMMENDATIONS;
SAE 30 WITH EMULSIFYING PROPERTIES
MIN. VISCOSITY 100 CST @ 100°F
FILL DRIVE UNTIL EXTERNAL RESERVOIR IS ONE THIRD FULL.

11) SEE TWIN DISC SERVICE MANUAL FOR ALL OTHER PROCEDURES AND SPECIFICATIONS.

12) TORQUE LOCK NUT TO 500 FT.LB. IF NECESSARY, CONTINUE UNTIL COTTER PIN SLOT IN NUT ALIGNS WITH HOLE IN SHAFT.

13) SEE TWIN DISC SERVICE MANUAL No. 1018051 FOR AFT SEAL REPLACEMENT PROCEDURE.

©

P/N	DESCRIPTION	DRY TORQUE VALUE
1004787	SCREW (COVER)	24 (IN-LB)
1004820	SCREW (FIN)	32 (FT-LB)
1004969	SCREW (BALL)	125 (FT-LB)
1004826	SCREW (RETAINER)	45 (FT-LB)
1005959	NUT (PROP)	900-1000 (FT-LB)
1005958	NUT, LOCK (PROP	SEE NOTE 12
1004906	SCREW	90 (FT-LB)
M2097F	SCREW	40 (FT-LB)

©

cad file 1017027A2

THIRD ANGLE PROJECTION

SIMILAR TO 1007027

MATERIAL
HEAT TREAT
SURFACE TREATMENT
WEIGHT LBS. | WT* LBS. IN*
FIRST USE
ASSY. MODEL ASD-16
NAME DRIVE ASS'Y

UNLESS OTHERWISE SPECIFIED
MACHINED DIMENSIONS
X.X ±0.030
X.XX ±0.010
X.XXX ±0.005
ALL ANGULAR TOLERANCES ±1°
GEOMETRIC TOLERANCING PER ANSI Y14.5M 1982

DATE 7/11/97
SCALE 1:4
DRN. J.K.
CHK. GAM
APPD. GAM

TWIN DISC INCORPORATED RACINE, WI 53403 - USA

1007027A

SHEET 2 OF 2 REV H

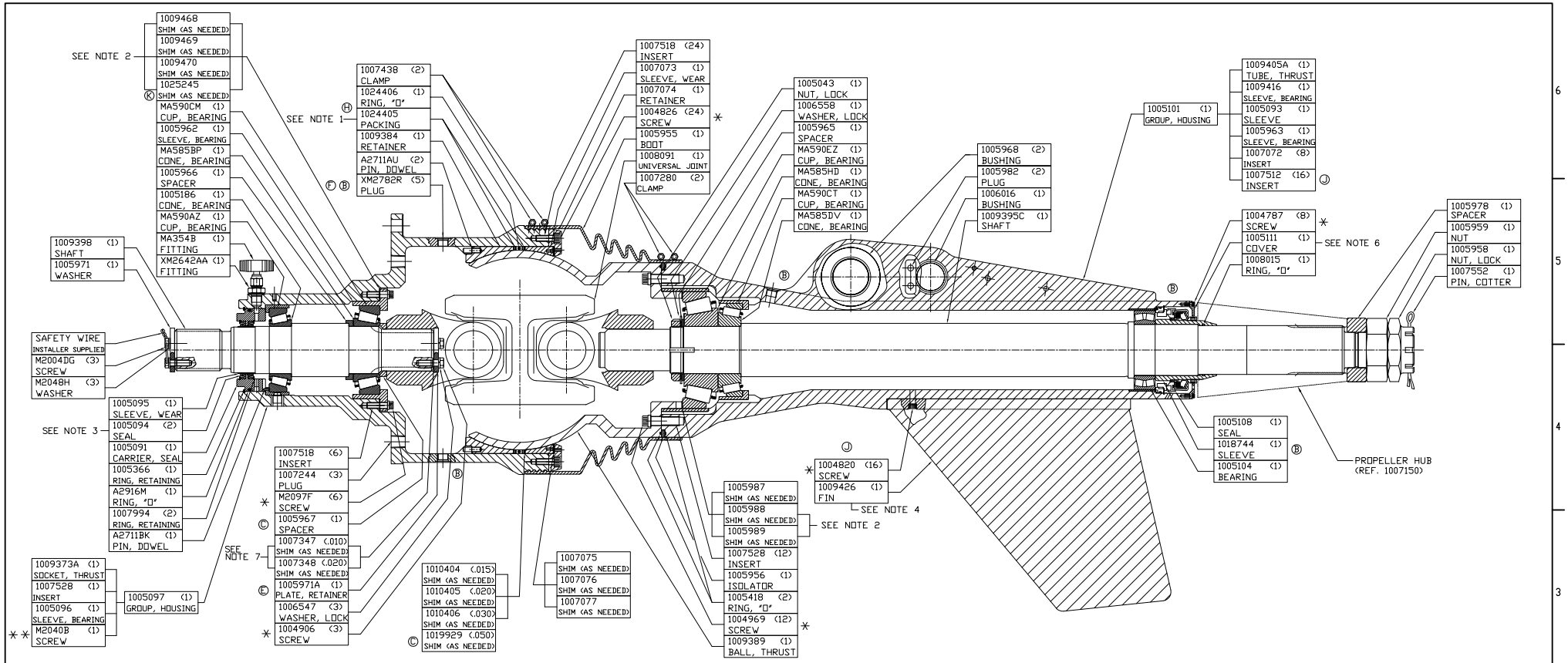

FEATURES:
- MECHANICAL FACE SEAL
- 17-4 STAINLESS STEEL SHAFTING
- PERMANENTLY INCORPORATES PREVIOUS FACE SEAL RETROFIT FEATURES

SUPPORTING DOCUMENTATION:

BILL OF MATERIAL (BOM)----------1018684
INSTALLATION DRAWING -------- 1011038
SERVICE MANUAL ---------- 1020915
MASS ELASTIC SYSTEM DWG. ---- B3504AJ
OWNER'S MANUAL ---------- 1021487

THIRD ANGLE PROJECTION

SIMILAR TO 1007027A

SHT.NO.	REV	ZONE	CH. NO.	DATE	SHT.NO.	REV	ZONE	CH. NO.	DATE
					1	F	E-5	ECN15388	3-27-88
						E	E-3	ECN14854	06-11-07
	K	F6	ECNVF-20530	6-19-09	2	D	C-2	ECN10363	8-27-01
1	J		ECNVF-2054	4-20-09	1 & 2	C		30513	1-3-01
1	H	E8	ECN15444	5-22-08	1 & 2	B	E-4 E-5	29623	9-30-99
2	G		ECN15303	4-25-08	1	A	A-3	29115	2-3-99

MATERIAL
HEAT TREAT
SURFACE TREATMENT

WEIGHT 596 kg 1312 LBS. Wt* LBS. IN*
FIRST USE
ASSY.
MODEL ASD 16
NAME DRIVE ASSEM.

UNLESS OTHERWISE SPECIFIED
MACHINED DIMENSIONS
XX ±0.030
X.XX ±0.010
X.XXX ±0.005
ALL ANGULAR TOLERANCES ±1°
GEOMETRIC TOLERANCING PER ANSI Y14.5M 1982

DATE 10-27-98
SCALE 1:4
DRN. W.Russell
CHK. F.Nystrom
APPD. F.Nystrom

TWIN DISC INCORPORATED RACINE, WI 53403 - USA

1018683

SHEET 1 OF 2 REV K

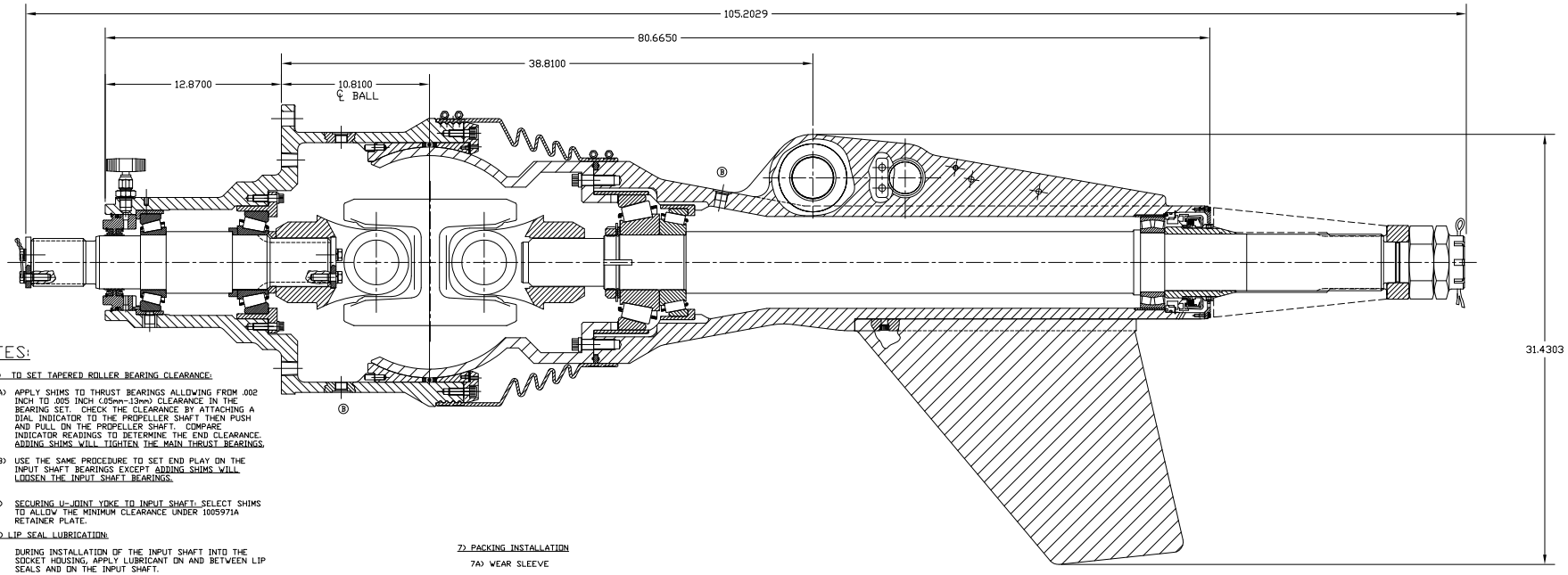

NOTES:

1) TO SET TAPERED ROLLER BEARING CLEARANCE:

1A) APPLY SHIMS TO THRUST BEARINGS ALLOWING FROM .002 INCH TO .005 INCH (.05mm-.13mm) CLEARANCE IN THE BEARING SET. CHECK THE CLEARANCE BY ATTACHING A DIAL INDICATOR TO THE PROPELLER SHAFT THEN PUSH AND PULL ON THE PROPELLER SHAFT. COMPARE INDICATOR READINGS TO DETERMINE THE END CLEARANCE. ADDING SHIMS WILL TIGHTEN THE MAIN THRUST BEARINGS.

1B) USE THE SAME PROCEDURE TO SET END PLAY ON THE INPUT SHAFT BEARINGS EXCEPT ADDING SHIMS WILL LOOSEN THE INPUT SHAFT BEARINGS.

2) SECURING U-JOINT YOKE TO INPUT SHAFT: SELECT SHIMS TO ALLOW THE MINIMUM CLEARANCE UNDER 1005971A RETAINER PLATE.

3) LIP SEAL LUBRICATION:

DURING INSTALLATION OF THE INPUT SHAFT INTO THE SOCKET HOUSING, APPLY LUBRICANT ON AND BETWEEN LIP SEALS AND ON THE INPUT SHAFT.

THE GREASE LUBRICANT USED ON THE LIP SEALS AND ELSEWHERE IN THIS SURFACE DRIVE MUST BE A MARINE GRADE LITHIUM GREASE FORMULATED FOR USE IN SALT WATER. TWIN DISC RECOMMENDS "RED LITHIUM GREASE" AVAILABLE FROM ZEP MANUFACTURING CO., ATLANTA, GEORGIA, USA. OR AN EQUIVALEMT PRODUCT.

4) TORQUE VALUES FOR FASTENERS:

P/N	DESCRIPTION	DRY TORQUE VALUES	
		INCH	METRIC
1004787	SEAL COVER SCREW	24 IN-LB	2700 N-mm
1004820	FIN SCREW	32 FT-LB	44 N-m
1004969	THRUST BALL SCREW	125 FT-LB	170 N-m
1004826	BALL RETAINER SCREW	45 FT-LB	60 N-m
1005959	PROPELLER NUT	900-1000 FT-LB	1220-1360 N-m
1005958	PROPELLER JAM NUT	SEE NOTE 10	SEE NOTE 10
1004906	U-JOINT YOKE SCREW	90 FT-LB	120 N-m
M2097F	BEARING SLEEVE SCREW	40 FT-LB	55 N-m
M2004DG	COMPANION FLANGE SCREW	40 FT-LB	55 N-m
M2040B	BRG SLEEVE SET SCREW	50 FT-LB	70 N-m
XM2782R	FILL & DRAIN PLUGS	35 FT-LB	50 N-m
M2051FT	LUBE OIL PIPE PLUG	SEE NOTE 6B	
1007280 1007438	RUBBER-BOOT CLAMPS	40 IN-LB	4520 N-mm

G 5) RECOMMENDED LUBRICATING OIL:

SAE30W/SAE40W
API SERVICE CATEGORY CF OR HIGHER, CERTIFIED BY VENDOR TO PASS CATERPILLAR TEST TO-4.
SAE80W/SAE90W
HYPOID EP TYPE, API GL GRADE 5.

FILL DRIVE UNTIL EXTERNAL RESERVOIR IS ONE THIRD FULL. APPROXIMATE CAPACITY 75-95 LITERS (20-25 GALLONS).

LOCTITE INSTRUCTIONS (SEE SHEET 1 FOR LOCATIONS):
(USE ALL APPLICABLE SOLVENTS, PRIMERS, AND ACTIVATORS)

6) COAT THE * MARKED THREADS WITH LOCTITE THREAD LOCKING COMPOUND NO. 242 (BLUE SEMI-PERMANENT).

6A) COAT THE * * MARKED THREADS WITH LOCTITE THREAD LOCKING COMPOUND NO. 270 (RED, PERMANENT).

6B) COAT PIPE THREADS WITH LOCTITE NO. 545 (PURPLE SEMI-PERMANENT). ASSEMBLE PIPE PLUGS FINGER TIGHT, THEN WRENCH-TIGHTEN 1 1/2 TO 2 TURNS.

7) PACKING INSTALLATION

7A) WEAR SLEEVE

a) PLACE FORWARD RETAINER (1009384) INTO SOCKET HOUSING. ENSURE THE RETAINER IS SEATED FIRMLY AGAINST THE SHOULDER IN THE SOCKET.

b) THIS PROCEDURE IS TO SHIM THE WEAR SLEEVE (1007073) TO THE THRUST BALL (1009389). PLACE THE THRUST BALL INTO THE FORWARD RETAINER. INSTALL ENOUGH SHIMS (OVER SHIM THE AFT RETAINER) AS TO CREATE A GAP BETWEEN THE AFT RETAINER AND THE SOCKET HOUSING.

c) THE WEIGHT OF THE AFT RETAINER WILL CAUSE THE WEAR RING TO SEAT AS A LINE FIT TO THE BALL. BECAUSE THE AFT RETAINER WAS OVER SHIMMED, A GAP WILL EXIST BETWEEN THE RETAINER AND THE SOCKET HOUSING. MEASURE THIS GAP. TAKE SEVERAL READINGS AROUND THE UNIT AND AVERAGE THE VALUES.

d) REMOVE THE AMOUNT OF SHIMS EQUIVALENT TO OR THE NEXT SIZE LARGER THAN THE GAP MEASURED. FOR EXAMPLE, IF THE GAP MEASURED IS .115 INCHES, REMOVE .120 INCHES. THIS WILL CREATE A LINE FIT TO SLIGHTLY LOOSE BETWEEN THE WEAR SLEEVE AND THE BALL. THE WEAR SLEEVE HAS NOW BEEN SHIMMED PROPERLY TO THE BALL.

7B) SEAL AND PACKING

(THRUST BALL PACKING, QTY 2, 54.75 LENGTH EACH, IS REQUIRED.)

a) REMOVE THE THRUST BALL FROM THE SOCKET. INSTALL THE PACKING, O-RING AND THEN PACKING OVER THE FORWARD RETAINER. NEXT, SHIMS ARE REQUIRED BETWEEN THE WEAR SLEEVE AND PACKING. THE GOAL IS TO OBTAIN THE PROPER SQUEEZE ON THE O-RING. THE PACKING IS NOT A RESILIENT MATERIAL, THEREFORE, ONCE COMPRESSED WILL MAINTAIN ITS SHAPE. PROPER SQUEEZE ON THE O-RING IS 10-15% OF THE CROSS SECTION WHICH IS .04 TO .06 INCHES.

b) INITIALLY OVER-SHIM THE PACKING MATERIAL BY INSERTING .150 INCHES OF SHIMS. INSTALL THE WEAR SLEEVE , AFT RETAINER AND BOLTS. TORQUE EVENLY TO 25 FT-LB. BECAUSE THE PACKING WAS OVER-SHIMMED, A GAP WILL EXIST BETWEEN THE RETAINER AND THE SOCKET HOUSING. MEASURE THIS GAP. TAKE SEVERAL READINGS AROUND THE UNIT AND AVERAGE THE VALUES.

c) LOOSEN THE BOLTS ON THE AFT RETAINER TO ALLOW THE O-RING TO RELAX AGAIN, MEASURE THIS GAP. TAKE SEVERAL READINGS AROUND THE UNIT AND AVERAGE THE VALUES. THE DIFFERENCE BETWEEN THESE TWO READINGS IS THE SQUEEZE ON THE O-RING.

7C) EXAMPLE

a) .150 SHIMS ON THE PACKING, RETAINER BOLTS TORQUED TO 25 FT-LBS— GAP=.030 AVG.
b) LOOSEN RETAINER BOLTS. ——— GAP=.110 AVG.
c) SQUEEZE ON O-RING. ——— SQUEEZE=.080

THE O-RING SQUEEZE SHOULD BE BETWEEN .040-.060. IN THIS EXAMPLE, 0.030 OF SHIM MATERIAL SHOULD BE REMOVED.

G 8) BEARING AND SLEEVE INSTALLATION

BEARING RACES AND SEAL SLEEVES MUST BE SHRUNK ONTO SHAFTS. HEAT TO ABOUT 120° C (250° F)

AT ASSEMBLY, COAT PROPELLER AND INPUT SHAFTS AND THE BEARINGS AND SLEEVE I.D. WHERE THEY ARE IN CONTACT. COAT WITH AN ANTI-SEIZE PRODUCT THAT DOES NOT CONTAIN GRAPHITE OR MILYBDENUM DISULPHIDE. TWIN DISC RECOMMENDS "LOCTITE WHITE HI-TEMP ANTI-SEIZE" NO. 34517 OR 34518 OR EQUAL PRODUCT.

APPLY A THIN EVEN COATING OF PASTE ONTO COMPONENT SURFACES. RUB THOROUGHLY INTO SURFACES WITH A CLEAN LINT FREE CLOTH. LEAVING A COATING DEPTH OF ABOUT .0001 IN (.003 mm).

EXCESSIVE COATING DEPTH WILL RESULT IN SLEEVE AND BEARING DISTORTION AND MAY PREVENT BEARING ASSEMBLY AND REDUCE BEARING LIFE.

AFTER INSTALLING PROPELLER BEARING RACE AND PRIOR TO INSTALLING MECHANICAL SEAL, CLEAN EXCESS ANTI-SEIZE PASTE FROM PROPELLER SHAFT.

G 9) APPLY MARINE GRADE SILICONE (NON-HARDENING) TO THE FIN PAD SURFACE PRIOR TO INSTALLING FIN.

10) TORQUE JAM NUT TO 700-800 FT.-LB. (1000-1150 N-m). APPROACH LOWER VALUE. IF SLOT DOES NOT ALIGN WITH HOLE IN SHAFT, INCREASE TORQUE UNTIL THE HOLE ALIGNS. DO NOT EXCEED MAXIMUM TORQUE.

11) PROPELLER NUT TORQUE REQUIRES PERIODIC CHECK; SEE TWIN DISC SERVICE MANUAL FOR PROPELLER NUT TORQUE SCHEDULE.

12) SEE TWIN DISC SERVICE MANUAL FOR AFT SEAL REPLACEMENT PROCEDURE.

13) SEE TWIN DISC SERVICE MANUAL FOR ALL OTHER PROCEDURES AND SPECIFICATIONS.

14) P/N (QTY) NAME

SUPPORTING DOCUMENTATION:

G BILL OF MATERIAL (BOM) -------- 1018684
INSTALLATION DRAWING -------- 1011038
SERVICE MANUAL ---------- 1020915
MASS ELASTIC SYSTEM DWG. ---- B3504AJ
OWNER'S MANUAL ---------- 1021487

THIRD ANGLE PROJECTION

SIMILAR TO

1007027A

MATERIAL
HEAT TREAT
SURFACE TREATMENT

WEIGHT 596 kg 1312 LBS. | WR² LBS. IN²
FIRST USE
ASSY.
MODEL ASD 16
NAME DRIVE ASSEM.

UNLESS OTHERWISE SPECIFIED
MACHINED DIMENSIONS
X.X ±0.030
X.XX ±0.010
X.XXX ±0.005
ALL ANGULAR TOLERANCES ±1°
GEOMETRIC TOLERANCING PER ANSI Y14.5M 1982

DATE 10-27-98
SCALE 1:4
DRN. W.Russell
CHK. F.Nystrom
APPD. F.Nystrom

TWIN DISC INCORPORATED RACINE, WI 53403 - USA

1018683

SHEET 2 OF 2 REV K

F E D C B A

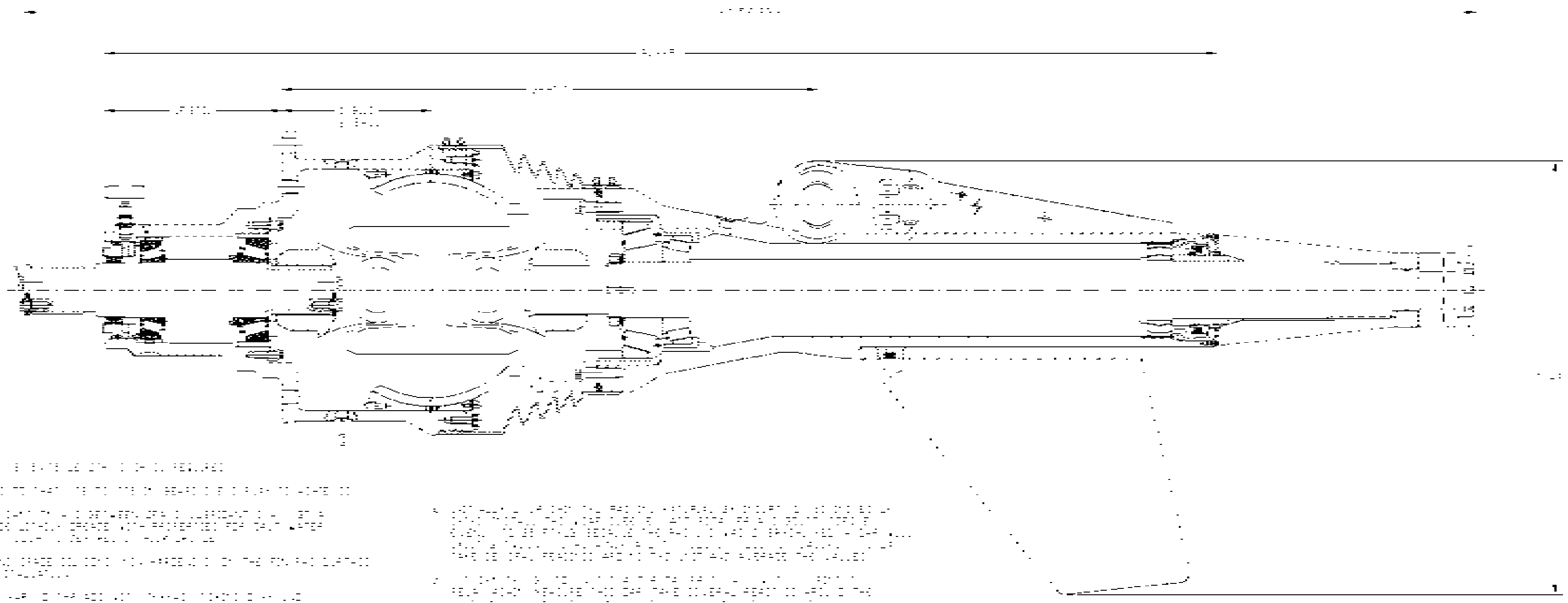

TWIN DISC

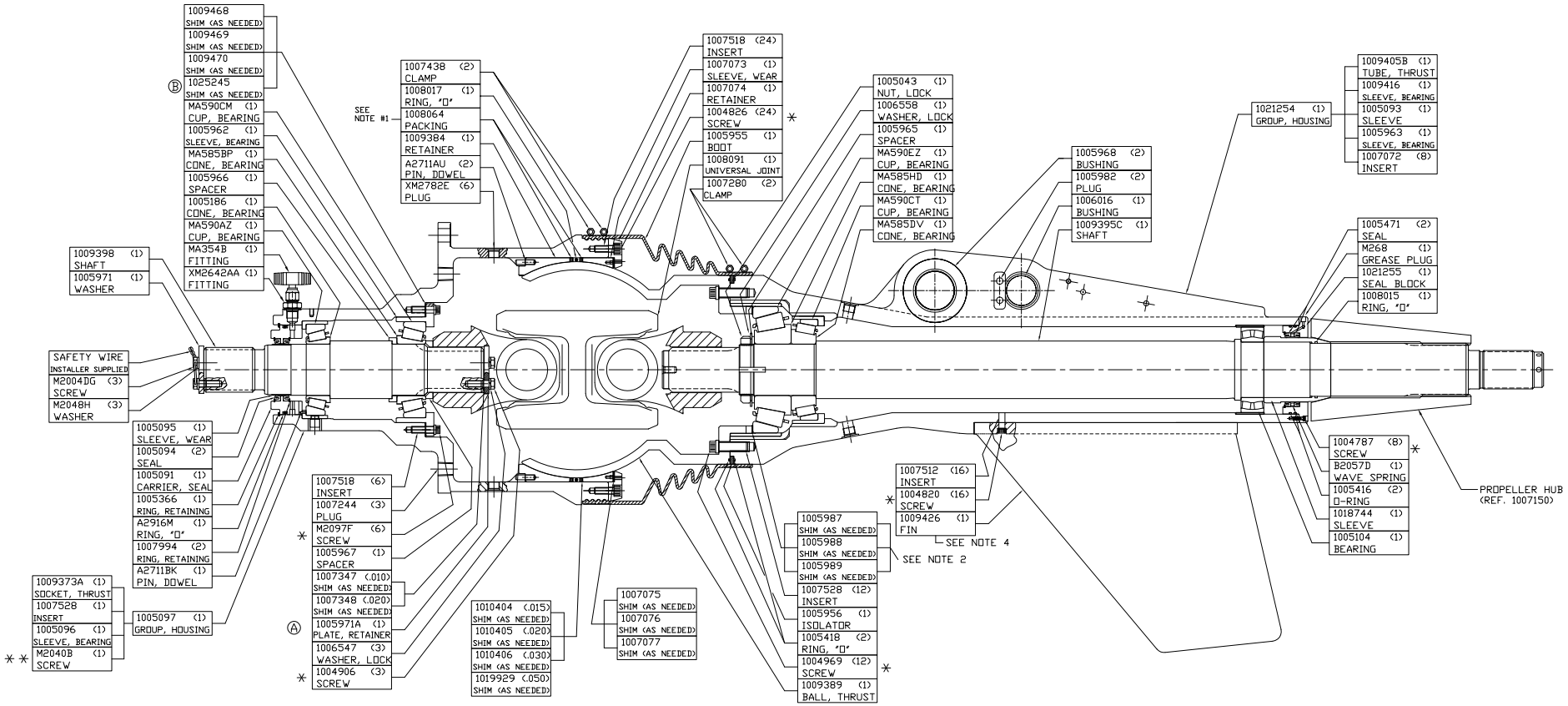

BOM: 1021244

REV	SHEET	ZONE	CH. NO.	DATE	REV	SHEET	ZONE	CH. NO.	DATE
					B		F6	ECNWF-20530	6-19-09
					A		E3	ECN14854	6-11-07

UNLESS OTHERWISE SPECIFIED MACHINED DIMENSIONS
X.X ±0.030
X.XX ±0.010
X.XXX ±0.005
ALL ANGULAR TOLERANCES ±1°
GEOMETRIC TOLERANCING PER ASME Y14.5M 1994

WEIGHT 596 kg 1312 LBS
WR² LBS/IN²
FIRST USE ASSY. ASD 16 MODEL

INCH
THIRD ANGLE PROJECTION

MATERIAL
SIMILAR TO 1007027A
HEAT TREAT
NAME DRIVE ASSEMBLY

DATE 8-18-03
SCALE 1:4
DRN. J.Robinson
CHK. F.Nystrom
APPD. F.Nystrom

SHEET 1 PARTS DRAWING
SHEET 2 ASSEMBLY NOTES

TWIN DISC INCORPORATED RACINE, WI 53403 - USA

1021245

DWG SIZE D SHT. 1 of 2 REV B

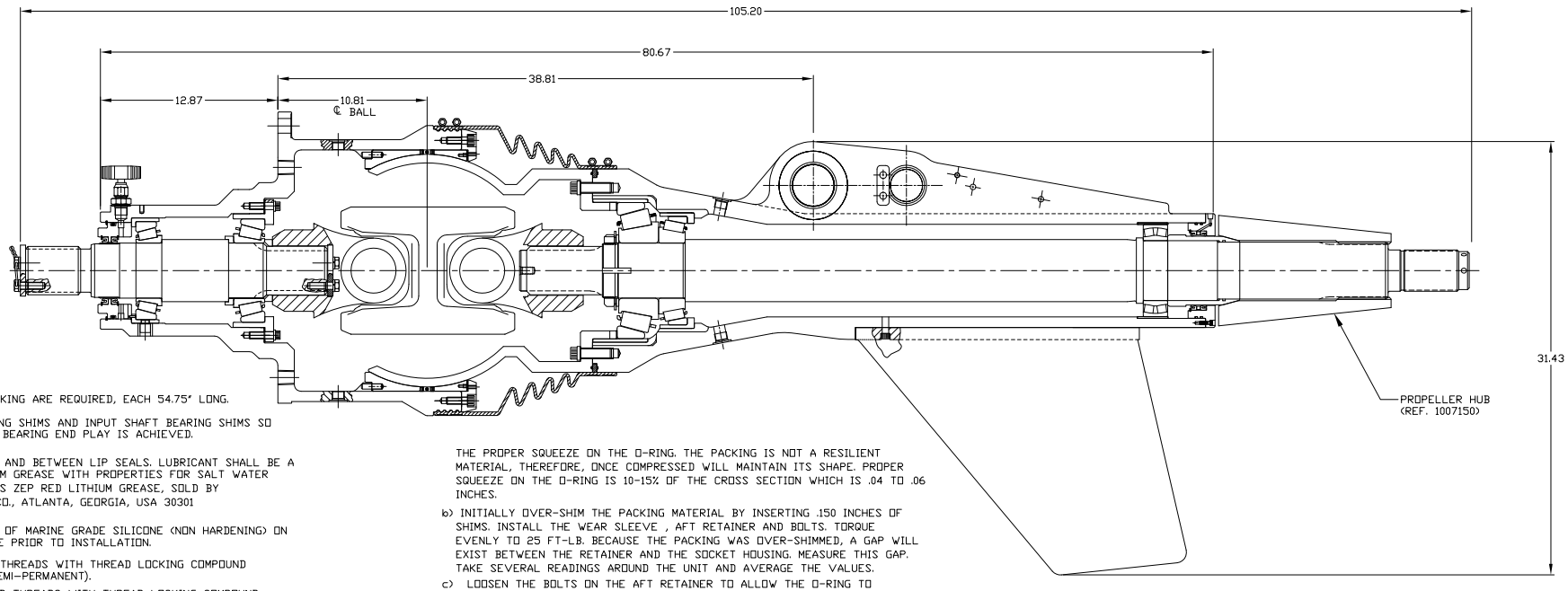

NOTES:

1) TWO LENGTHS OF PACKING ARE REQUIRED, EACH 54.75" LONG.

2) STACK THRUST BEARING SHIMS AND INPUT SHAFT BEARING SHIMS SO THAT .002 TO .005 IN. BEARING END PLAY IS ACHIEVED.

3) APPLY LUBRICANT ON AND BETWEEN LIP SEALS. LUBRICANT SHALL BE A MARINE GRADE LITHIUM GREASE WITH PROPERTIES FOR SALT WATER ENVIRONMENT SUCH AS ZEP RED LITHIUM GREASE, SOLD BY ZEP MANUFACTIRING CO., ATLANTA, GEORGIA, USA 30301

4) APPLY A THIN LAYER OF MARINE GRADE SILICONE (NON HARDENING) ON THE FIN PAD SURFACE PRIOR TO INSTALLATION.

5) COAT THE * MARKED THREADS WITH THREAD LOCKING COMPOUND 242 OR 742 (BLUE< SEMI-PERMANENT).

COAT THE * * MARKED THREADS WITH THREAD LOCKING COMPOUND 270 (RED, PERMANENT).

USE ALL APPLICABLE SOLVENTS, PRIMERS, AND ACTIVATORS.

6) SHIM FOR MINIMUM GAP UNDER 1005971A RETAINER PLATE AT THE AFT END OF THE INPUT SHAFT. DO NOT SHIM THE SIMILAR WASHER ON THE FORWARD END OF THE INPUT SHAFT.

7) BEARING RACES AND SEAL SLEEVE MUST BE SHRUNK ONTO SHAFTS. HEAT TO ABOUT 120°C (250°F)

8) <u>SHIM PROCEDURE FOR THRUST BALL PACKING</u>

<u>WEAR SLEEVE</u>

a) PLACE FORWARD RETAINER (1009384) INTO SOCKET HOUSING. ENSURE THE RETAINER IS SEATED FIRMLY AGAINST THE SHOULDER IN THE SOCKET.

b) THIS PROCEDURE IS TO SHIM THE WEAR SLEEVE (1007073) TO THE THRUST BALL (1009389). PLACE THE THRUST BALL INTO THE FORWARD RETAINER. INSTALL ENOUGH SHIMS (OVER SHIM THE AFT RETAINER) AS TO CREATE A GAP BETWEEN THE AFT RETAINER AND THE SOCKET HOUSING.

c) THE WEIGHT OF THE AFT RETAINER WILL CAUSE THE WEAR RING TO SEAT AS A LINE FIT TO THE BALL. BECAUSE THE AFT RETAINER WAS OVER SHIMMED, A GAP WILL EXIST BETWEEN THE RETAINER AND THE SOCKET HOUSING. MEASURE THIS GAP. TAKE SEVERAL READINGS AROUND THE UNIT AND AVERAGE THE VALUES.

d) REMOVE THE AMOUNT OF SHIMS EQUIVALENT TO OR THE NEXT SIZE LARGER THAN THE GAP MEASURED. FOR EXAMPLE, IF THE GAP MEASURED IS .115 INCHES, REMOVE .120 INCHES. THIS WILL CREATE A LINE FIT TO SLIGHTLY LOOSE BETWEEN THE WEAR SLEEVE AND THE BALL. THE WEAR SLEEVE HAS NOW BEEN SHIMMED PROPERLY TO THE BALL.

<u>SEAL AND PACKING</u>

a) REMOVE THE THRUST BALL FROM THE SOCKET. INSTALL THE PACKING, O-RING AND THEN PACKING OVER THE FORWARD RETAINER. NEXT, SHIMS ARE REQUIRED BETWEEN THE WEAR SLEEVE AND PACKING. THE GOAL IS TO OBTAIN THE PROPER SQUEEZE ON THE O-RING. THE PACKING IS NOT A RESILIENT MATERIAL, THEREFORE, ONCE COMPRESSED WILL MAINTAIN ITS SHAPE. PROPER SQUEEZE ON THE O-RING IS 10-15% OF THE CROSS SECTION WHICH IS .04 TO .06 INCHES.

b) INITIALLY OVER-SHIM THE PACKING MATERIAL BY INSERTING .150 INCHES OF SHIMS. INSTALL THE WEAR SLEEVE , AFT RETAINER AND BOLTS. TORQUE EVENLY TO 25 FT-LB. BECAUSE THE PACKING WAS OVER-SHIMMED, A GAP WILL EXIST BETWEEN THE RETAINER AND THE SOCKET HOUSING. MEASURE THIS GAP. TAKE SEVERAL READINGS AROUND THE UNIT AND AVERAGE THE VALUES.

c) LOOSEN THE BOLTS ON THE AFT RETAINER TO ALLOW THE O-RING TO RELAX AGAIN, MEASURE THIS GAP. TAKE SEVERAL READINGS AROUND THE UNIT AND AVERAGE THE VALUES. THE DIFFERENCE BETWEEN THESE TWO READINGS IS THE SQUEEZE ON THE O-RING.

EXAMPLE

A) .150 SHIMS ON THE PACKING, RETAINER BOLTS TORQUED TO 25 FT-LBS:— GAP=.030 AVG.
B) LOOSEN RETAINER BOLTS. ——— GAP=.110 AVG.
C) SQUEEZE ON O-RING. ——— SQUEEZE=.080
THE O-RING SQUEEZE SHOULD BE BETWEEN .040-.060. IN THIS EXAMPLE, 0.030 OF SHIM MATERIAL SHOULD BE REMOVED.

9) AT ASSEMBLY, COAT PROPELLER AND INPUT SHAFTS AND THE BEARINGS AND SLEEVE I.D. WHERE THEY ARE IN CONTACT. COAT WITH DOW-CORNING "P-37 ULTRAPURE PASTE" OR EQUAL PRODUCT.

APPLY A THIN EVEN COATING OF PASTE ONTO COMPONENT SURFACES. RUB RUB THOROUGHLY INTO SURFACES WITH A CLEAN LINT FREE CLOTH, LEAVING A COATING DEPTH LESS THAN .003mm (.0001 IN). EXCESSIVE COATING DEPTH WILL RESULT IN SLEEVE AND BEARING DISTORTION AND MAY PREVENT BEARING ASSEMBLY AND REDUCE BEARING LIFE.

10) USE GRADE 8 S574 TORQUE VALUES UNLESS NOTED OTHERWISE.

11) LUBRICANT RECOMMENDATION:
API SERVICE CATEGORY CF OR HIGHER :
SAE 30 OIL - MIN. VISCOSITY 100 CST @ 100° F
SAE 40 OIL - MIN. VISCOSITY 141 CST @ 100°F
FILL DRIVE UNTIL EXTERNAL RESERVOIR IS ONE THIRD FULL. APPROXIMATE CAPACITY 28 QUARTS.

12) TORQUE LOCK NUT TO 700-800 FT.-LB.(1000-1150 N-m). APPROACH LOWER VALUE, THEN CONTINUE UNTIL COTTER PIN SLOT IN NUT ALIGNS WITH HOLE IN SHAFT.

13) SEE TWIN DISC SERVICE MANUAL No. 1018051 FOR SCHEDULE TO PERIODICALLY CHECK PROPELLER NUT TORQUE.

14) SEE TWIN DISC SERVICE MANUAL FOR ALL OTHER PROCEDURES AND SPECIFICATIONS.

P/N	DESCRIPTION	DRY TORQUE VALUE	
1004787	SCREW (COVER)	24 (IN-LB)	2700 N-mm
1004820	SCREW (FIN)	32 (FT-LB)	44 N-m
1004969	SCREW (BALL)	125 (FT-LB)	170 N-m
1004826	SCREW (RETAINER)	45 (FT-LB)	60 N-m
1005959	NUT (PROP)	900-1000 (FT-LB)	1220-1360 N-m
1005958	NUT, LOCK (PROP	SEE NOTE 10	SEE NOTE 10
1004906	SCREW	90 (FT-LB)	120 N-m
M2097F	SCREW	40 (FT-LB)	55 N-m

BOM: 1021244

SHEET 1 PARTS DRAWING
SHEET 2 ASSEMBLY NOTES

TWIN DISC INCORPORATED RACINE, WI 53403 - USA

REV	SHEET	ZONE	CH. NO.	DATE	REV	SHEET	ZONE	CH. NO.	DATE

UNLESS OTHERWISE SPECIFIED MACHINED DIMENSIONS X ±0.030 X.X ±0.010 X.XX ±0.005 ALL ANGULAR TOLERANCES ±1° GEOMETRIC TOLERANCING PER ASME Y14.5M 1994

WEIGHT 596 kg LBS 1312 | WRP LBS/ft² | FIRST USE ASSY. ASD 16 MODEL

INCH — THIRD ANGLE PROJECTION

MATERIAL | HEAT TREAT | SIMILAR TO 1007027A | NAME DRIVE ASSEMBLY

DATE 8-18-03 | SCALE 1:4 | DRN. J.Robinson | CHK. F.Nystrom | APPD. F.Nystrom

1021245

DWG SIZE D | SHT. 2 of 2 | REV B

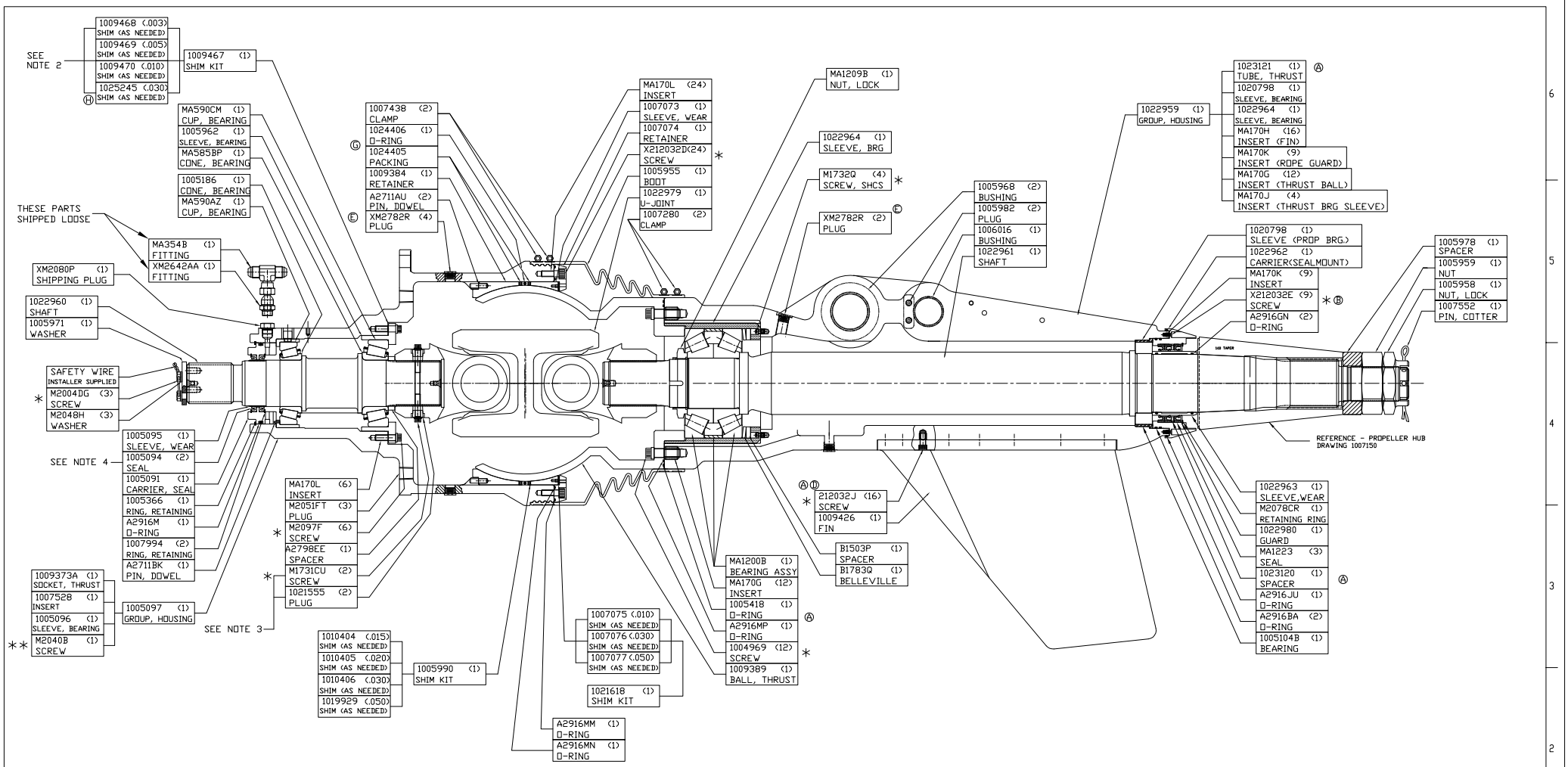

FEATURES:

- IMPROVED THRUST TUBE ASSEMBLY
  - LARGER, HEAVIER THRUST TUBE AND PROPELLER SHAFT
  - SOLID THREAD INSERTS
  - NEW OIL SUMP ALLOWS BETTER DRAINING OF LUBE OIL
  - SLEEVES FIRMLY HELD BY KEYS AND SCREWS
  - ONE-SIZE THRUST BEARING - BETTER ALIGNMENT, FEWER PARTS
- LONG PROPELLER TAPER (1:10 SLOPE) - GREATER STABILITY
- LARGER U-JOINT SPLINE (DIN 100 mm) FOR GREATER CAPACITY

SUPPORTING DOCUMENTATION:

BILL OF MATERIAL (BOM)----------1022953
INSTALLATION DRAWING -------- 1011039
SERVICE MANUAL ---------- 1020915
MASS ELASTIC SYSTEM DWG. ---- B3504AJ
OWNER'S MANUAL ---------- 1021487

REV	SHEET	ZONE	CH. NO.	DATE	REV	SHEET	ZONE	CH. NO.	DATE
H		F6	ECNWF-20530	6-19-09	D	1 & 2		ECN15320	03-04-08
G	1	E6	ECN15444	5-22-08	C	1 & 2		ECN14854	7-10-07
F	2		ECN15303	4-25-08	B	1		ECN14496	01-25-06
E	1		ECN15388	3-27-08	A	1 & 2		ECN14425	10-17-06

UNLESS OTHERWISE SPECIFIED MACHINED DIMENSIONS X.X ±0.030 X.XX ±0.010 X.XXX ±0.005 ALL ANGULAR TOLERANCES ±1° GEOMETRIC TOLERANCING PER ASME Y14.5M 1994

WEIGHT 596 kg 1312 LBS. VAR LBS/IN² FIRST USE ASSY. ASD 16 MODEL

INCH — THIRD ANGLE PROJECTION

MATERIAL — HEAT TREAT — SIMILAR TO 1021361 — NAME DRIVE ASSEMBLY

SHEET 1 PARTS DRAWING
SHEET 2 ASSEMBLY NOTES

DATE 9-06-06 — TWIN DISC INCORPORATED RACINE, WI 53403 - USA
1:4 — DRN. D. MEYERS — CHK. F.Nystrom — APPD. F.Nystrom
1022954
DWG SIZE D — SHT. 1 OF 2 — REV H

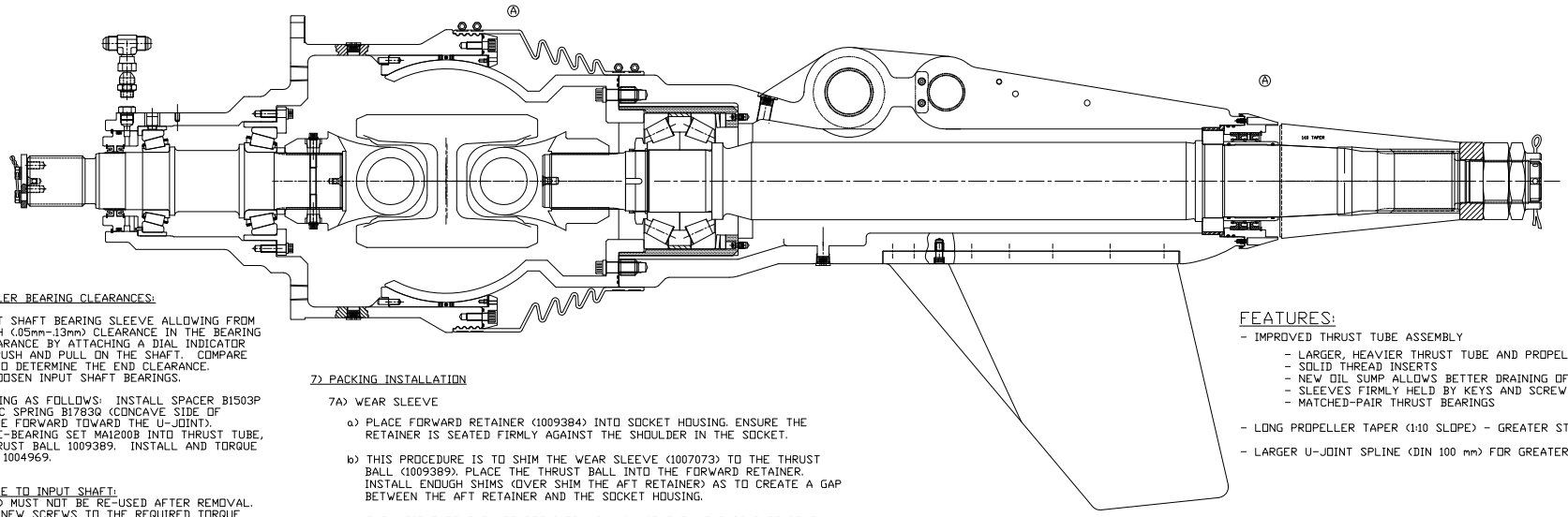

NOTES:

1) TO SET TAPERED ROLLER BEARING CLEARANCES:

1A) APPLY SHIMS TO INPUT SHAFT BEARING SLEEVE ALLOWING FROM .002 INCH TO .005 INCH (.05mm-.13mm) CLEARANCE IN THE BEARING SET. CHECK THE CLEARANCE BY ATTACHING A DIAL INDICATOR TO THE SHAFT THEN PUSH AND PULL ON THE SHAFT. COMPARE INDICATOR READINGS TO DETERMINE THE END CLEARANCE. ADDING SHIMS WILL LOOSEN INPUT SHAFT BEARINGS.

1B) INSTALL THRUST BEARING AS FOLLOWS: INSTALL SPACER B1503P THEN BELLEVILLE DISC SPRING B1783Q (CONCAVE SIDE OF BELLEVILLE MUST FACE FORWARD TOWARD THE U-JOINT). INSERT ENTIRE DOUBLE-BEARING SET MA1200B INTO THRUST TUBE, FOLLOWED BY THE THRUST BALL 1009389. INSTALL AND TORQUE THRUST BALL SCREWS 1004969.

2) SECURING U-JOINT YOKE TO INPUT SHAFT:
TWO SCREWS (M1731CU) MUST NOT BE RE-USED AFTER REMOVAL. ALTERNATELY TORQUE NEW SCREWS TO THE REQUIRED TORQUE VALUE.

3) LIP SEAL LUBRICATION:
DURING INSTALLATION OF SHAFTS INTO HOUSINGS, APPLY LUBRICANT ON AND BETWEEN LIP SEALS AND ON THE SHAFT SLEEVES.

THE GREASE LUBRICANT USED ON THE LIP SEALS AND ELSEWHERE IN THIS SURFACE DRIVE MUST BE A MARINE GRADE LITHIUM GREASE FORMULATED FOR USE IN SALT WATER. TWIN DISC RECOMMENDS "RED LITHIUM GREASE" AVAILABLE FROM ZEP MANUFACTURING CO., ATLANTA, GEORGIA, USA. OR AN EQUIVALENT PRODUCT.

4) TORQUE VALUES FOR FASTENERS:

	P/N	DESCRIPTION	DRY TORQUE VALUES	
			INCH	METRIC
Ⓓ	X212032E	SEAL COVER SCREW	24 IN-LB	2700 N-mm
Ⓓ	212032J	STEERING FIN SCREW	32 FT-LB	44 N-m
	1004969	THRUST BALL SCREW	125 FT-LB	170 N-m
	X212032D	TH. BALL RETAINER SCREW	45 FT-LB	60 N-m
	1005959	PROPELLER NUT	900-1000 FT-LB	1220-1360 N-m
	1005958	PROPELLER JAM NUT	SEE NOTE 9	SEE NOTE 9
Ⓒ Ⓐ	M1731CU	U-JOINT YOKE SCREW	50 FT-LB	120 N-m
	M2097F	BEARING SLEEVE SCREW	40 FT-LB	55 N-m
	M2004DG	COMPANION FLANGE SCREW	40 FT-LB	55 N-m
	M2040B	BRG SLEEVE SET SCREW	50 FT-LB	70 N-m
Ⓔ	XM2782R	FILL & DRAIN PLUGS	35 FT-LB	50 N-m
	M2051FT	LUBE OIL PIPE PLUG	SEE NOTE 6B	
	M1732Q	THRUST BEARING SLEEVE	10 FT-LB	14 N-m
	1007280 1007438	RUBBER-BOOT CLAMPS	40 IN-LB	4520 N-mm

Ⓕ 5) RECOMMENDED LUBRICATING OIL:
SAE30W/SAE40W
API SERVICE CATEGORY CF OR HIGHER, CERTIFIED BY VENDOR TO PASS CATERPILLAR TEST TO-4.
SAE80W/SAE90W
HYPOID EP TYPE, API GL GRADE 5.

FILL DRIVE UNTIL EXTERNAL RESERVOIR IS ONE THIRD FULL. APPROXIMATE CAPACITY 75-95 LITERS (20-25 GALLONS).

LOCTITE INSTRUCTIONS (SEE SHEET 1 FOR LOCATIONS):
(USE ALL APPLICABLE SOLVENTS, PRIMERS, AND ACTIVATORS)

6) COAT THE * MARKED THREADS WITH LOCTITE THREAD LOCKING COMPOUND NO. 242 (BLUE SEMI-PERMANENT).

6A) COAT THE * * MARKED THREADS WITH LOCTITE THREAD LOCKING COMPOUND NO. 270 (RED, PERMANENT).

6B) COAT PIPE THREADS WITH LOCTITE NO. 545 (PURPLE SEMI-PERMANENT). ASSEMBLE PIPE PLUGS FINGER TIGHT, THEN WRENCH-TIGHTEN 1 1/2 TO 2 TURNS.

7) PACKING INSTALLATION

7A) WEAR SLEEVE

a) PLACE FORWARD RETAINER (1009384) INTO SOCKET HOUSING. ENSURE THE RETAINER IS SEATED FIRMLY AGAINST THE SHOULDER IN THE SOCKET.

b) THIS PROCEDURE IS TO SHIM THE WEAR SLEEVE (1007073) TO THE THRUST BALL (1009389). PLACE THE THRUST BALL INTO THE FORWARD RETAINER. INSTALL ENOUGH SHIMS (OVER SHIM THE AFT RETAINER) AS TO CREATE A GAP BETWEEN THE AFT RETAINER AND THE SOCKET HOUSING.

c) THE WEIGHT OF THE AFT RETAINER WILL CAUSE THE WEAR RING TO SEAT AS A LINE FIT TO THE BALL. BECAUSE THE AFT RETAINER WAS OVER SHIMMED, A GAP WILL EXIST BETWEEN THE RETAINER AND THE SOCKET HOUSING. MEASURE THIS GAP. TAKE SEVERAL READINGS AROUND THE UNIT AND AVERAGE THE VALUES.

d) REMOVE THE AMOUNT OF SHIMS EQUIVALENT TO OR THE NEXT SIZE LARGER THAN THE GAP MEASURED. FOR EXAMPLE, IF THE GAP MEASURED IS .115 INCHES, REMOVE .120 INCHES. THIS WILL CREATE A LINE FIT TO SLIGHTLY LOOSE BETWEEN THE WEAR SLEEVE AND THE BALL. THE WEAR SLEEVE HAS NOW BEEN SHIMMED PROPERLY TO THE BALL.

7B) SEAL AND PACKING

THRUST BALL PACKING, QTY 2, 54.75 LENGTH EACH, IS REQUIRED.

a) REMOVE THE THRUST BALL FROM THE SOCKET. INSTALL THE PACKING, O-RING AND THEN PACKING OVER THE FORWARD RETAINER. NEXT, SHIMS ARE REQUIRED BETWEEN THE WEAR SLEEVE AND PACKING. THE GOAL IS TO OBTAIN THE PROPER SQUEEZE ON THE O-RING. THE PACKING IS NOT A RESILIENT MATERIAL, THEREFORE, ONCE COMPRESSED WILL MAINTAIN ITS SHAPE. PROPER SQUEEZE ON THE O-RING IS 10-15% OF THE CROSS SECTION WHICH IS .04 TO .06 INCHES.

b) INITIALLY OVER-SHIM THE PACKING MATERIAL BY INSERTING .150 INCHES OF SHIMS. INSTALL THE WEAR SLEEVE , AFT RETAINER AND BOLTS. TORQUE EVENLY TO 25 FT-LB. BECAUSE THE PACKING WAS OVER-SHIMMED, A GAP WILL EXIST BETWEEN THE RETAINER AND THE SOCKET HOUSING. MEASURE THIS GAP. TAKE SEVERAL READINGS AROUND THE UNIT AND AVERAGE THE VALUES.

c) LOOSEN THE BOLTS ON THE AFT RETAINER TO ALLOW THE O-RING TO RELAX AGAIN, MEASURE THIS GAP. TAKE SEVERAL READINGS AROUND THE UNIT AND AVERAGE THE VALUES. THE DIFFERENCE BETWEEN THESE TWO READINGS IS THE SQUEEZE ON THE O-RING.

7C) EXAMPLE

a) .150 SHIMS ON THE PACKING, RETAINER BOLTS TORQUED TO 25 FT-LBS.— GAP=.030 AVG.
b) LOOSEN RETAINER BOLTS. ——————————————— GAP=.110 AVG.
c) SQUEEZE ON O-RING. ——————————————————— SQUEEZE=.080

THE O-RING SQUEEZE SHOULD BE BETWEEN .040-.060. IN THIS EXAMPLE, 0.030 OF SHIM MATERIAL SHOULD BE REMOVED.

Ⓕ 8) BEARING AND SLEEVE INSTALLATION
BEARING RACES AND SEAL SLEEVES MUST BE SHRUNK ONTO SHAFTS. HEAT TO ABOUT 120° C (250° C).

AT ASSEMBLY, COAT PROPELLER AND INPUT SHAFTS AND THE BEARINGS AND SLEEVE I.D. WHERE THEY ARE IN CONTACT. COAT WITH AN ANTI-SEIZE PRODUCT THAT DOES NOT CONTAIN GRAPHITE OR MOLYBDENUM DISULPHIDE. TWIN DISC RECOMMENDS "LOCTITE WHITE HI-TEMP ANTI-SEIZE" NO. 34517 OR 34518 OR EQUAL PRODUCT.

APPLY A THIN EVEN COATING OF PASTE ONTO COMPONENT SURFACES. RUB THOROUGHLY INTO SURFACES WITH A CLEAN LINT FREE CLOTH. LEAVING A COATING DEPTH OF ABOUT .0001 IN (.003 mm).

EXCESSIVE COATING DEPTH WILL RESULT IN SLEEVE AND BEARING DISTORTION AND MAY PREVENT BEARING ASSEMBLY AND REDUCE BEARING LIFE.

Ⓕ 9) APPLY MARINE GRADE SILICONE (NON-HARDENING) TO THE FIN PAD SURFACE PRIOR TO INSTALLING FIN.

10) TORQUE JAM NUT TO 700-800 FT.-LB. (1000-1150 N-m). APPROACH LOWER VALUE. IF SLOT DOES NOT ALIGN WITH HOLE IN SHAFT, INCREASE TORQUE UNTIL THE HOLE ALIGNS. DO NOT EXCEED MAXIMUM TORQUE.

Ⓕ 11) PROPELLER NUT TORQUE REQUIRES PERIODIC CHECK; SEE TWIN DISC SERVICE MANUAL FOR PROPELLER NUT TORQUE SCHEDULE.

12) SEE TWIN DISC SERVICE MANUAL FOR ALL OTHER PROCEDURES AND SPECIFICATIONS.

13) — P/N (QTY) NAME

FEATURES:

- IMPROVED THRUST TUBE ASSEMBLY
  - LARGER, HEAVIER THRUST TUBE AND PROPELLER SHAFT
  - SOLID THREAD INSERTS
  - NEW OIL SUMP ALLOWS BETTER DRAINING OF LUBE OIL
  - SLEEVES FIRMLY HELD BY KEYS AND SCREWS
  - MATCHED-PAIR THRUST BEARINGS
- LONG PROPELLER TAPER (1:10 SLOPE) - GREATER STABILITY
- LARGER U-JOINT SPLINE (DIN 100 mm) FOR GREATER CAPACITY

SUPPORTING DOCUMENTATION:

BILL OF MATERIAL (BOM)----------1022953
INSTALLATION DRAWING -------- 1011039
Ⓕ SERVICE MANUAL ---------- 1020915
MASS ELASTIC SYSTEM DWG. ---- B3504AJ
OWNER'S MANUAL ---------- 1021487

SHEET 1
PARTS DRAWING
SHEET 2
ASSEMBLY NOTES

UNLESS OTHERWISE SPECIFIED MACHINED DIMENSIONS X.X ±0.030 X.XX ±0.010 X.XXX ±0.005 ALL ANGULAR TOLERANCES ±1° GEOMETRIC TOLERANCING PER ASME Y14.5M 1994	WEIGHT 596 kg 1312 LBS.	WM² LBS/M²	FIRST USE ASSY. ASD 16 MODEL	INCH THIRD ANGLE PROJECTION	MATERIAL / SIMILAR TO 1021361
HEAT TREAT / NAME DRIVE ASSEMBLY	DATE 9-06-06	1:4	DRN. D. MEYERS	CHK. F.Nystrom	APPD. F.Nystrom
TWIN DISC INCORPORATED RACINE, WI 53403 - USA	1022954	DWG SIZE D	SHT. 2 OF 2	REV H	

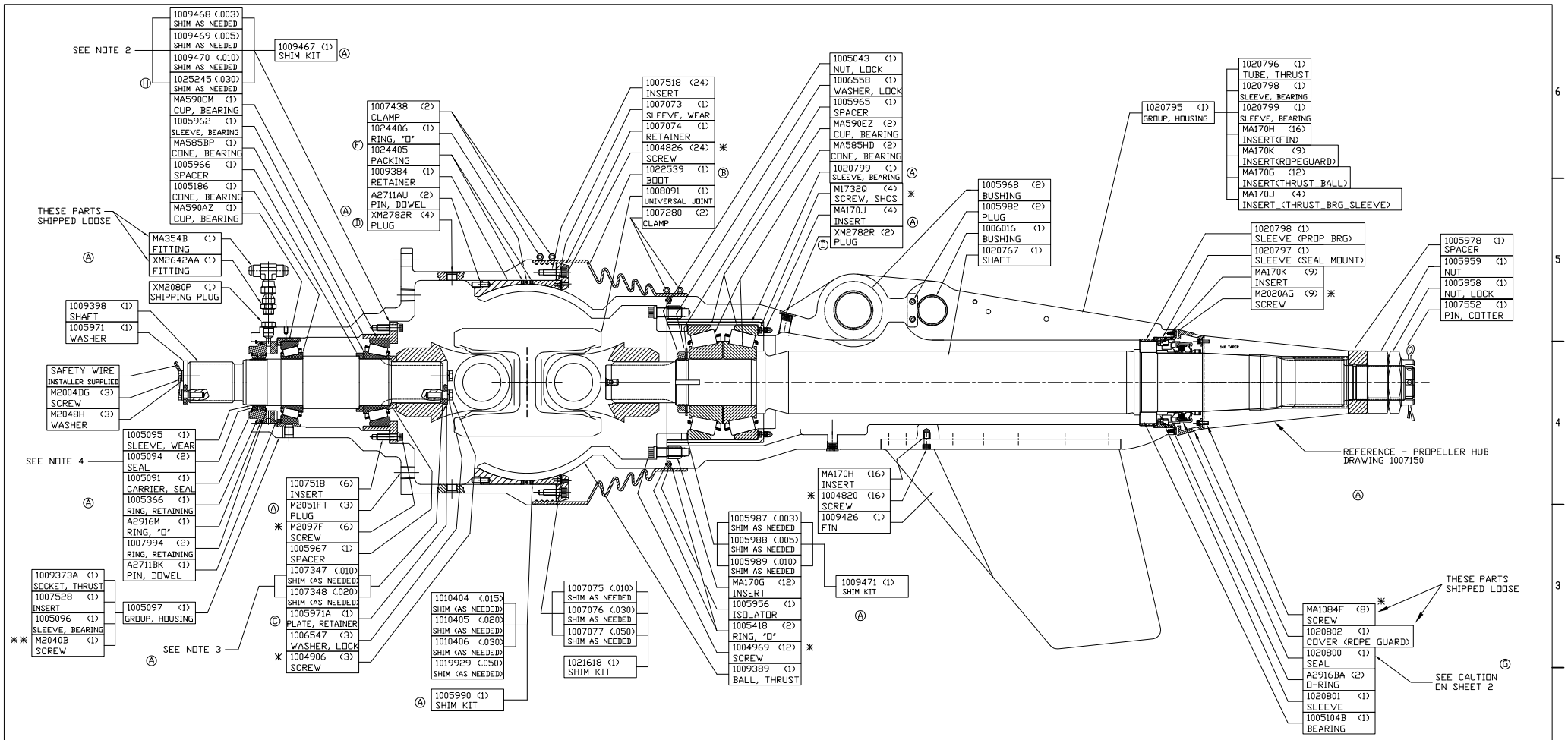

FEATURES:

* IMPROVED THRUST TUBE ASSEMBLY
  - LARGER, HEAVIER THRUST TUBE AND PROPELLER SHAFT
  - SOLID THREAD INSERTS
  - NEW OIL SUMP ALLOWS BETTER DRAINING OF LUBE OIL
  - SLEEVES FIRMLY HELD BY KEYS AND SCREWS
  - ONE-SIZE THRUST BEARING - BETTER ALIGNMENT, FEWER PARTS
* LONG PROPELLER TAPER (1:10 SLOPE) - GREATER STABILITY
* 15-5 STAINLESS STEEL SHAFTING - IMPROVED ALLOY
* MECHANICAL FACE SEAL
* SAE SPLINES ON U-JOINT

Ⓐ SUPPORTING DOCUMENTATION:

OWNER'S MANUAL ---------- 1021487
INSTALLATION DRAWING -------- 1011039
SERVICE MANUAL ---------- 1020915
MASS ELASTIC SYSTEM DWG. ---- B3504AJ
BILL OF MATERIAL (BOM)----------1020763

REV	SHEET	ZONE	CH. NO.	DATE	REV	SHEET	ZONE	CH. NO.	DATE
H		F6	ECNWF-20530	6-19-09	D	1		ECN15388	3-27-08
G	1, 2	A-2, A-3	ECNW-F20217	11-01-08	C			ECN14854	6-11-07
F	1	E-6	ECN15444	5-22-08	B	1		ECN14792	4-25-07
E	2		ECN15303	4-25-08	A	1&2		ECN11942	2-19-04

UNLESS OTHERWISE SPECIFIED MACHINED DIMENSIONS X.X ±0.030, X.XX ±0.010, X.XXX ±0.005, ALL ANGULAR TOLERANCES ±1°, GEOMETRIC TOLERANCING PER ASME Y14.5M 1994

WEIGHT 596 kg 1312 LBS. WM² LBS/IN²

FIRST USE ASSY. ASD 16A1L MODEL

INCH — THIRD ANGLE PROJECTION

MATERIAL — SIMILAR TO

HEAT TREAT

NAME: DRIVE ASSEMBLY

SHEET 1 PARTS DRAWING
SHEET 2 ASSEMBLY NOTES

DATE 3-19-03 — SCALE 1:4 — DRN. W.Russell — CHK. F.Nystrom — APPD. F.Nystrom

TWIN DISC INCORPORATED, RACINE, WI 53403 - USA

1020764

DWG SIZE D — SHT. 1 OF 2 — REV H

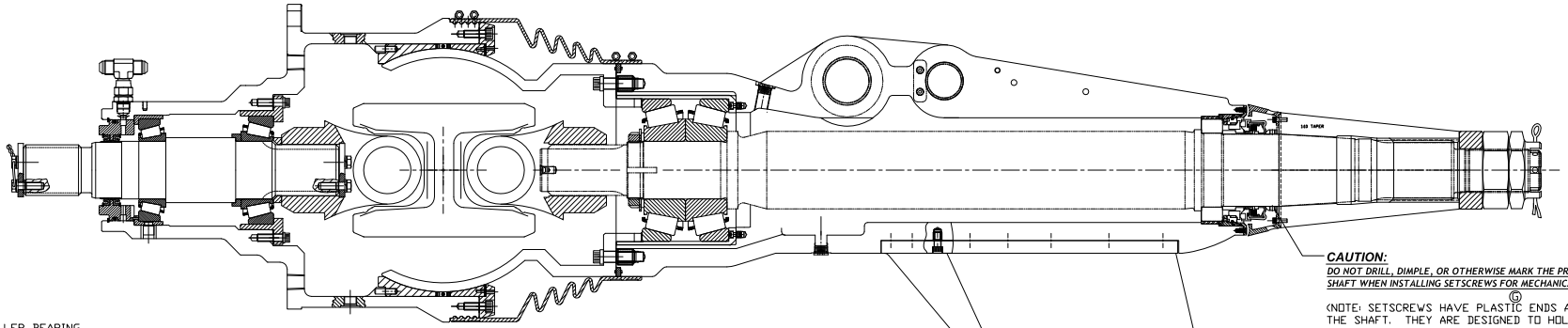

NOTES:

1) TO SET TAPERED ROLLER BEARING CLEARANCE:

1A) APPLY SHIMS TO THRUST BEARINGS ALLOWING FROM .002 INCH TO .005 INCH (.05mm-.13mm) CLEARANCE IN THE BEARING SET. CHECK THE CLEARANCE BY ATTACHING A DIAL INDICATOR TO THE PROPELLER SHAFT THEN PUSH AND PULL ON THE PROPELLER SHAFT. COMPARE INDICATOR READINGS TO DETERMINE THE END CLEARANCE. ADDING SHIMS WILL TIGHTEN THE MAIN THRUST BEARINGS.

1B) USE THE SAME PROCEDURE TO SET END PLAY ON THE INPUT SHAFT BEARINGS EXCEPT ADDING SHIMS WILL LOOSEN THE INPUT SHAFT BEARINGS.

2) SECURING U-JOINT YOKE TO INPUT SHAFT:
SELECT SHIMS TO ALLOW THE MINIMUM CLEARANCE UNDER 1005971A RETAINER PLATE.

3) LIP SEAL LUBRICATION:
DURING INSTALLATION OF THE INPUT SHAFT INTO THE SOCKET HOUSING, APPLY LUBRICANT ON AND BETWEEN LIP SEALS AND ON THE INPUT SHAFT.

THE GREASE LUBRICANT USED ON THE LIP SEALS AND ELSEWHERE IN THIS SURFACE DRIVE MUST BE A MARINE GRADE LITHIUM GREASE FORMULATED FOR USE IN SALT WATER. TWIN DISC RECOMMENDS "RED LITHIUM GREASE" AVAILABLE FROM ZEP MANUFACTURING CO., ATLANTA, GEORGIA, USA. OR AN EQUIVALENT PRODUCT.

4) TORQUE VALUES FOR FASTENERS:

	P/N	DESCRIPTION	DRY TORQUE VALUES	
			INCH	METRIC
	M2020AG	SEAL COVER SCREW	24 IN-LB	2700 N-mm
	1004820	FIN SCREW	32 FT-LB	44 N-m
	1004969	THRUST BALL SCREW	125 FT-LB	170 N-m
	1004826	BALL RETAINER SCREW	45 FT-LB	60 N-m
	1005959	PROPELLER NUT	900-1000 FT-LB	1220-1360 N-m
	1005958	PROPELLER JAM NUT	SEE NOTE 9	SEE NOTE 9
	1004906	U-JOINT YOKE SCREW	90 FT-LB	120 N-m
	M2097F	BEARING SLEEVE SCREW	40 FT-LB	55 N-m
	M2004DG	COMPANION FLANGE SCREW	40 FT-LB	55 N-m
	M2040B	BRG SLEEVE SET SCREW	50 FT-LB	70 N-m
D	XM2782R	FILL & DRAIN PLUGS	35 FT-LB	50 N-m
	M2051FT	LUBE OIL PIPE PLUGS	SEE NOTE 6B	
E	M1732Q	THRUST BEARING SLEEVE	10 FT-LB	14 N-m
E	MA1084F	ROPE GUARD SCREWS	7 FT-LB	9 N-m
	M20428E	MECHANICAL SEAL COLLAR	10 FT-LB	14 N-m
	1007280 1007438	RUBBER-BOOT CLAMPS	40 IN-LB	4520 N-mm

E 5) RECOMMENDED LUBRICATING OIL:
SAE30W/SAE40W
API SERVICE CATEGORY CF OR HIGHER, CERTIFIED BY VENDOR TO PASS CATERPILLAR TEST TO-4.
SAE80W/SAE90W
HYPOID EP TYPE, API GL GRADE 5.

FILL DRIVE UNTIL EXTERNAL RESERVOIR IS ONE THIRD FULL. APPROXIMATE CAPACITY 75-95 LITERS (20-25 QUARTS).

LOCTITE INSTRUCTIONS: (SEE SHEET 1 FOR LOCATIONS)

(USE ALL APPLICABLE SOLVENTS, PRIMERS, AND ACTIVATORS)

6) COAT THE * MARKED THREADS WITH LOCTITE THREAD LOCKING COMPOUND NO. 242 (BLUE SEMI-PERMANENT).

6A) COAT THE ** MARKED THREADS WITH LOCTITE THREAD LOCKING COMPOUND NO. 270 (RED, PERMANENT).

A 6B) COAT PIPE THREADS WITH LOCTITE NO. 545 (PURPLE SEMI-PERMANENT). ASSEMBLE PIPE PLUGS FINGER TIGHT THEN WRENCH-TIGHTEN 1 1/2 TO 2 TURNS.

7) PACKING INSTALLATION

7A) WEAR SLEEVE

a) PLACE FORWARD RETAINER (1009384) INTO SOCKET HOUSING. ENSURE THE RETAINER IS SEATED FIRMLY AGAINST THE SHOULDER IN THE SOCKET.

b) THIS PROCEDURE IS TO SHIM THE WEAR SLEEVE (1007073) TO THE THRUST BALL (1009389). PLACE THE THRUST BALL INTO THE FORWARD RETAINER. INSTALL ENOUGH SHIMS (OVER SHIM THE AFT RETAINER) AS TO CREATE A GAP BETWEEN THE AFT RETAINER AND THE SOCKET HOUSING.

c) THE WEIGHT OF THE AFT RETAINER WILL CAUSE THE WEAR RING TO SEAT AS A LINE FIT TO THE BALL. BECAUSE THE AFT RETAINER WAS OVER SHIMMED, A GAP WILL EXIST BETWEEN THE RETAINER AND THE SOCKET HOUSING. MEASURE THIS GAP. TAKE SEVERAL READINGS AROUND THE UNIT AND AVERAGE THE VALUES.

d) REMOVE THE AMOUNT OF SHIMS EQUIVALENT TO OR THE NEXT SIZE LARGER THAN THE GAP MEASURED. FOR EXAMPLE, IF THE GAP MEASURED IS .115 INCHES, REMOVE .120 INCHES. THIS WILL CREATE A LINE FIT TO SLIGHTLY LOOSE BETWEEN THE WEAR SLEEVE AND THE BALL. THE WEAR SLEEVE HAS NOW BEEN SHIMMED PROPERLY TO THE BALL.

7B) SEAL AND PACKING

THRUST BALL PACKING, QTY 2, 54.75 LENGTH EACH, IS REQUIRED.

a) REMOVE THE THRUST BALL FROM THE SOCKET. INSTALL THE PACKING, O-RING AND THEN PACKING OVER THE FORWARD RETAINER. NEXT, SHIMS ARE REQUIRED BETWEEN THE WEAR SLEEVE AND PACKING. THE GOAL IS TO OBTAIN THE PROPER SQUEEZE ON THE O-RING. THE PACKING IS NOT A RESILIENT MATERIAL, THEREFORE, ONCE COMPRESSED WILL MAINTAIN ITS SHAPE. PROPER SQUEEZE ON THE O-RING IS 10-15% OF THE CROSS SECTION WHICH IS .04 TO .06 INCHES.

b) INITIALLY OVER-SHIM THE PACKING MATERIAL BY INSERTING .150 INCHES OF SHIMS. INSTALL THE WEAR SLEEVE , AFT RETAINER AND BOLTS. TORQUE EVENLY TO 25 FT-LB. BECAUSE THE PACKING WAS OVER-SHIMMED, A GAP WILL EXIST BETWEEN THE RETAINER AND THE SOCKET HOUSING. MEASURE THIS GAP. TAKE SEVERAL READINGS AROUND THE UNIT AND AVERAGE THE VALUES.

c) LOOSEN THE BOLTS ON THE AFT RETAINER TO ALLOW THE O-RING TO RELAX AGAIN, MEASURE THIS GAP. TAKE SEVERAL READINGS AROUND THE UNIT AND AVERAGE THE VALUES. THE DIFFERENCE BETWEEN THESE TWO READINGS IS THE SQUEEZE ON THE O-RING.

7C) EXAMPLE

a) .150 SHIMS ON THE PACKING, RETAINER BOLTS TORQUED TO 25 FT-LBS.— GAP=.030 AVG.
b) LOOSEN RETAINER BOLTS. ——— GAP=.110 AVG.
c) SQUEEZE ON O-RING. ——— SQUEEZE=.080

THE O-RING SQUEEZE SHOULD BE BETWEEN .040-.060. IN THIS EXAMPLE, 0.030 OF SHIM MATERIAL SHOULD BE REMOVED.

CAUTION:
DO NOT DRILL, DIMPLE, OR OTHERWISE MARK THE PROPELLER SHAFT WHEN INSTALLING SETSCREWS FOR MECHANICAL SEAL 1020800.

G
(NOTE: SETSCREWS HAVE PLASTIC ENDS AND WILL NOT DAMAGE THE SHAFT. THEY ARE DESIGNED TO HOLD THE COLLAR ONLY DURING ASSEMBLY AND MAY BE LEFT IN PLACE THEREAFTER. SEAL PRELOAD IS RETAINED PERMANENTLY BY SHIMS)

A E
FEATURES:

* IMPROVED THRUST TUBE ASSEMBLY
  - LARGER, HEAVIER THRUST TUBE AND PROPELLER SHAFT
  - SOLID THREAD INSERTS
  - NEW OIL SUMP ALLOWS BETTER DRAINING OF LUBE OIL
  - SLEEVES FIRMLY HELD BY KEYS AND SCREWS
  - ONE-SIZE THRUST BEARING - BEARING ALIGNMENT, FEWER PARTS
* LONG PROPELLER TAPER (1:10 SLOPE) - GREATER STABILITY
* 15-5 STAINLESS STEEL SHAFTING - IMPROVED ALLOY
* MECHANICAL FACE SEAL
* SAE SPLINES ON U-JOINT

E 8) BEARING AND SLEEVE INSTALLATION
BEARING RACE AND DEAL SLEEVES MUST BE SHRUNK ONTO SHAFTS. HEAT TO ABOUT 120° C (250°). AT ASSEMBLY, COAT PROPELLER AND INPUT SHAFTS AND THE BEARINGS AND SLEEVE I.D. WHERE THEY ARE IN CONTACT. COAT WITH AN ANTI-SEIZE PRODUCT THAT DOES NOT CONTAIN GRAPHITE OR MOLYBDENUM DISULPHIDE. TWIN DISC RECOMMENDS "LOCTITE WHITE HI-TEMP ANTI-SEIZE" NO. 34517 OR 34518 OR EQUAL PRODUCT.

APPLY A THIN EVEN COATING OF PASTE ONTO COMPONENT SURFACES. RUB THOROUGHLY INTO SURFACES WITH A CLEAN LINT FREE CLOTH. LEAVING A COATING DEPTH OF ABOUT .0001 IN (.003 mm).

EXCESSIVE COATING DEPTH WILL RESULT IN SLEEVE AND BEARING DISTORTION AND MAY PREVENT BEARING ASSEMBLY AND REDUCE BEARING LIFE.

A AFTER INSTALLING PROPELLER BEARING RACE AND PRIOR TO INSTALLING MECHANICAL SEAL, CLEAN EXCESS ANTI-SEIZE PASTE FROM PROPELLER SHAFT.

E 9) APPLY MARINE GRADE SILICONE (NON-HARDENING) TO THE FIN PAD SURFACE PRIOR TO INSTALLING FIN.

10) TORQUE JAM NUT TO 700-800 FT.-LB. (1000-1150 N-m). APPROACH LOWER VALUE. IF SLOT DOES NOT ALIGN WITH HOLE IN SHAFT, INCREASE TORQUE UNTIL THE HOLE ALIGNS. DO NOT EXCEED MAXIMUM TORQUE.

A 11) PROPELLER NUT TORQUE REQUIRES PERIODIC CHECK; SEE TWIN DISC SERVICE MANUAL FOR PROPELLER NUT TORQUE SCHEDULE.

E 12) SEE TWIN DISC SERVICE MANUAL FOR AFT SEAL REPLACEMENT PROCEDURE.

E 13) SEE TWIN DISC SERVICE MANUAL FOR ALL OTHER PROCEDURES AND SPECIFICATIONS.

14) P/N (QTY) NAME

SUPPORTING DOCUMENTATION:
OWNER'S MANUAL ----------1021487
INSTALLATION DRAWING -------- 1011039
E SERVICE MANUAL ---------- 1020915
MASS ELASTIC SYSTEM DWG. ---- B3504AJ
BILL OF MATERIAL (BOM)----------1020763

UNLESS OTHERWISE SPECIFIED MACHINED DIMENSIONS X.X ±0.030 X.XX ±0.010 X.XXX ±0.005 ALL ANGULAR TOLERANCES ±1° GEOMETRIC TOLERANCING PER ASME Y14.5M 1994	WEIGHT 596 kg 1312 LBS.	WM LBS/IN²	FIRST USE ASSY. ASD 16A1L MODEL	INCH THIRD ANGLE PROJECTION	MATERIAL / SIMILAR TO
	NOTICE: THIS PRINT CONTAINS PROPIETARY INFORMATION AND IS NOT TO BE USED IN ANY MANNER DETRIMENTAL TO THE INTEREST OF TWIN DISC, INCORPORATE. THIS NOTICE IS NOT INTENDED TO NULLIFY OR LIMIT RIGHTS GRANTED TO THE U.S. GOVERNMENT OR OTHERS BY CONTRACT.				

HEAT TREAT
NAME: DRIVE ASSEMBLY

SHEET 1 PARTS DRAWING
SHEET 2 ASSEMBLY NOTES

DATE 3-19-03 | SCALE 1:4 | TWIN DISC INCORPORATED RACINE, WI 53403 - USA
DRN. W.Russell | CHK. F.Nystrom | APPD. F.Nystrom
1020764
DWG SIZE D | SHT. 2 OF 2 | REV H

BOM	BOOT	CLAMP (SOCKET)	CLAMP (TH. TUBE)
1021360	1005955	1007438	1007280
1021360A	1022539	1007279B	1007279A

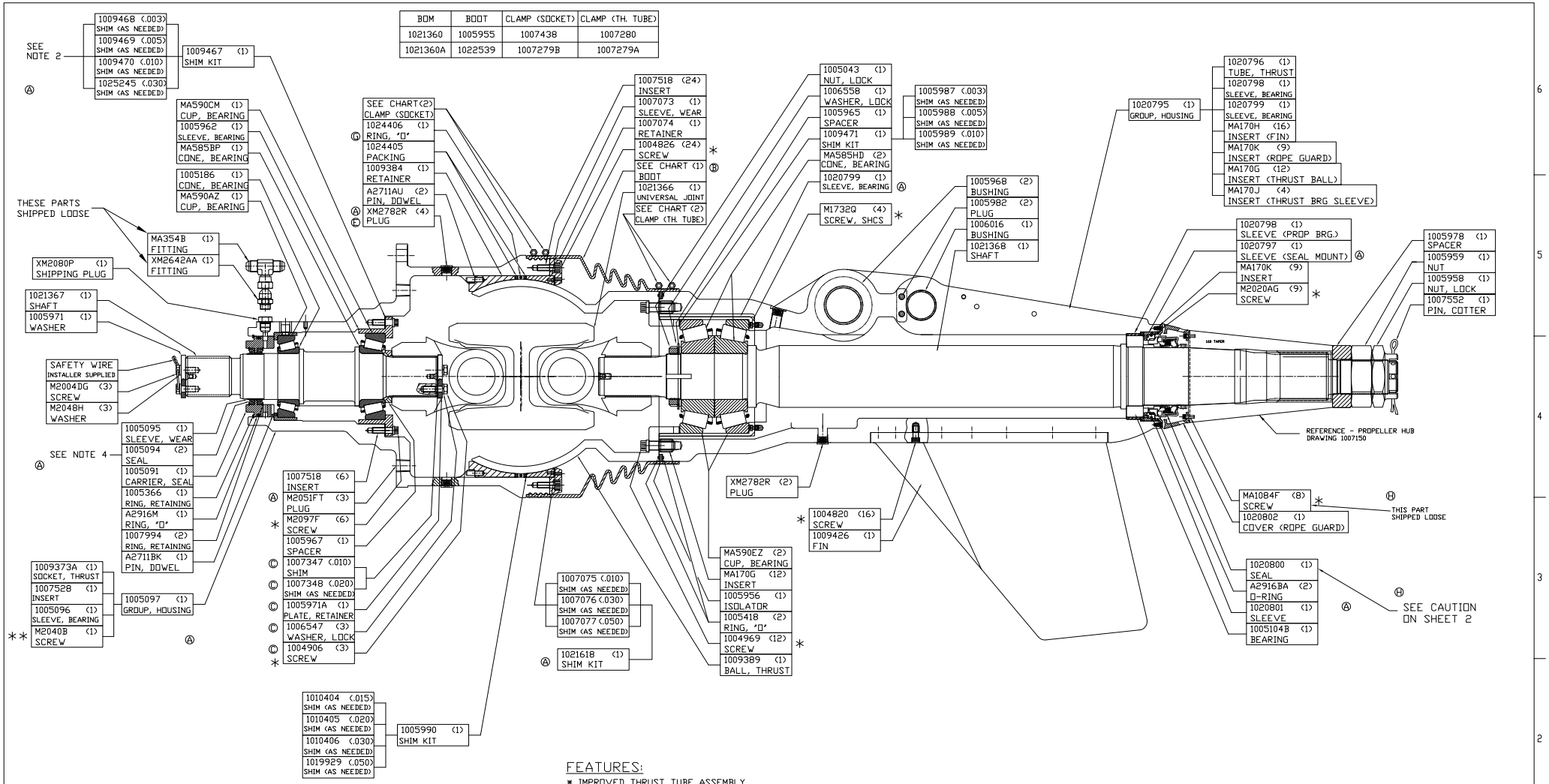

FEATURES:

- ✱ IMPROVED THRUST TUBE ASSEMBLY
  - LARGER, HEAVIER THRUST TUBE AND PROPELLER SHAFT
  - SOLID THREAD INSERTS
  - NEW OIL SUMP ALLOWS BETTER DRAINING OF LUBE OIL
  - SLEEVES FIRMLY HELD BY KEYS AND SCREWS
  - ONE-SIZE THRUST BEARING - BETTER ALIGNMENT, FEWER PARTS
- ✱ LONG PROPELLER TAPER (1:10 SLOPE) - GREATER STABILITY
- ✱ 15-5 STAINLESS STEEL SHAFTING - IMPROVED ALLOY
- ✱ LARGER U-JOINT SPLINE FOR GREATER CAPACITY
- ✱ MECHANICAL FACE SEAL
- ✱ DIN 90mm SPLINES ON U-JOINT

SUPPORTING DOCUMENTATION:

BILL OF MATERIAL (BOM)--------SEE CHART
INSTALLATION DRAWING -------- 1011039
Ⓕ SERVICE MANUAL ---------- 1020915
MASS ELASTIC SYSTEM DWG. ---- B3504AJ
OWNER'S MANUAL ---------- 1021487

SHEET 1 PARTS DRAWING
SHEET 2 ASSEMBLY NOTES

REV	SHEET	ZONE	CHANGE NUMBER	DATE
J	1		ECNWF-20670	7-09/2009
H	1,2		ECNWF-20217	11-01-2008
G	1	E6	ECN15444	5-22-2008
F	2		ECN15303	4-25-2008
E	1		ECN15388	3-27-2008
D	1,2		ECN15263	2-05-2008
C	1		ECN14854	6-11-2007
B	1		ECN14792	4-25-2007
A	2		ECN11942	2-19-2004

UNLESS OTHERWISE SPECIFIED MACHINED DIMENSIONS X.X ±0.030 X.XX ±0.010 X.XXX ±0.005 ALL ANGULAR TOLERANCES ±1° GEOMETRIC TOLERANCING PER ASME Y14.5M 1994

WEIGHT 596 kg 1312 LBS. | WRF LBS/IN² | FIRST USE ASSY. ASD16M1 MODEL

INCH | THIRD ANGLE PROJECTION | SIMILAR TO 1020764 | MATERIAL | HEAT TREAT | NAME DRIVE ASSEMBLY

DATE 06-25-2009 | SCALE 1:4 | DRN. D. Meyers | CHK F.Nystrom | APPD. F.Nystrom

TWIN DISC INCORPORATED RACINE, WI 53403 - USA

1021361_SERIES

DWG SIZE D | SHT. 1 OF 2 | REV J

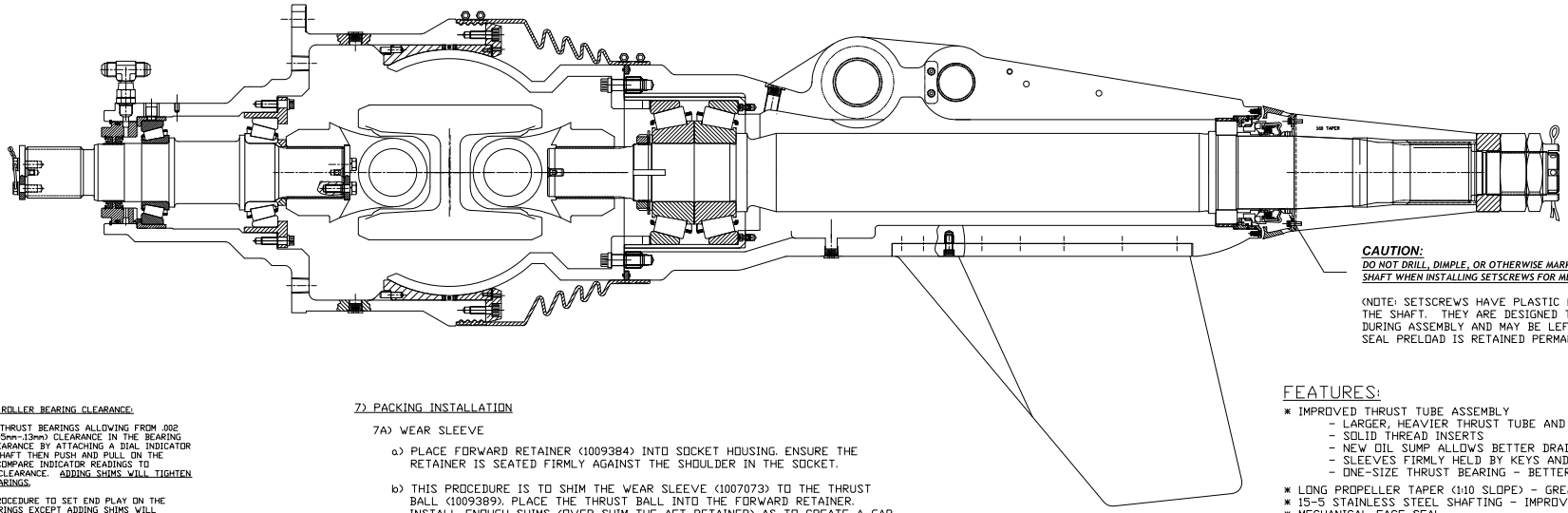

CAUTION:
DO NOT DRILL, DIMPLE, OR OTHERWISE MARK THE PROPELLER SHAFT WHEN INSTALLING SETSCREWS FOR MECHANICAL SEAL 1020800.

(NOTE: SETSCREWS HAVE PLASTIC ENDS AND WILL NOT DAMAGE THE SHAFT. THEY ARE DESIGNED TO HOLD THE COLLAR ONLY DURING ASSEMBLY AND MAY BE LEFT IN PLACE THEREAFTER. SEAL PRELOAD IS RETAINED PERMANENTLY BY SHIMS)

FEATURES:

* IMPROVED THRUST TUBE ASSEMBLY
  - LARGER, HEAVIER THRUST TUBE AND PROPELLER SHAFT
  - SOLID THREAD INSERTS
  - NEW OIL SUMP ALLOWS BETTER DRAINING OF LUBE OIL
  - SLEEVES FIRMLY HELD BY KEYS AND SCREWS
  - ONE-SIZE THRUST BEARING - BETTER ALIGNMENT, FEWER PARTS
* LONG PROPELLER TAPER (1:10 SLOPE) - GREATER STABILITY
* 15-5 STAINLESS STEEL SHAFTING - IMPROVED ALLOY
* MECHANICAL FACE SEAL
* DIN 90mm SPLINES ON U-JOINT

NOTES:

1) TO SET TAPERED ROLLER BEARING CLEARANCE:

1A) APPLY SHIMS TO THRUST BEARINGS ALLOWING FROM .002 INCH TO .005 INCH (.05mm-.13mm) CLEARANCE IN THE BEARING SET. CHECK THE CLEARANCE BY ATTACHING A DIAL INDICATOR TO THE PROPELLER SHAFT THEN PUSH AND PULL ON THE PROPELLER SHAFT. COMPARE INDICATOR READINGS TO DETERMINE THE END CLEARANCE. ADDING SHIMS WILL TIGHTEN THE MAIN THRUST BEARINGS.

1B) USE THE SAME PROCEDURE TO SET END PLAY ON THE INPUT SHAFT BEARINGS EXCEPT ADDING SHIMS WILL LOOSEN THE INPUT SHAFT BEARINGS.

2) SECURING U-JOINT YOKE TO INPUT SHAFT:
SELECT SHIMS TO ALLOW THE MINIMUM CLEARANCE UNDER 1005971A RETAINER PLATE.

3) LIP SEAL LUBRICATION:
DURING INSTALLATION OF THE INPUT SHAFT INTO THE SOCKET HOUSING, APPLY LUBRICANT ON AND BETWEEN LIP SEALS AND ON THE INPUT SHAFT.

THE GREASE LUBRICANT USED ON THE LIP SEALS AND ELSEWHERE IN THIS SURFACE DRIVE MUST BE A MARINE GRADE LITHIUM GREASE FORMULATED FOR USE IN SALT WATER. TWIN DISC RECOMMENDS "RED LITHIUM GREASE" AVAILABLE FROM ZEP MANUFACTURING CO., ATLANTA, GEORGIA, USA. OR AN EQUIVALENT PRODUCT.

4) TORQUE VALUES FOR FASTENERS:

P/N	DESCRIPTION	DRY TORQUE VALUES	
		INCH	METRIC
M2020AG	SEAL COVER SCREW	24 IN-LB	2700 N-mm
1004820	FIN SCREW	32 FT-LB	44 N-m
1004969	THRUST BALL SCREW	125 FT-LB	170 N-m
1004826	BALL RETAINER SCREW	45 FT-LB	60 N-m
1005959	PROPELLER NUT	900-1000 FT-LB	1220-1360 N-m
1005958	PROPELLER JAM NUT	SEE NOTE 9	SEE NOTE 9
1004906	U-JOINT YOKE SCREW	90 FT-LB	120 N-m
M2097F	BEARING SLEEVE SCREW	40 FT-LB	55 N-m
M2040G	COMPANION FLANGE SCREW	40 FT-LB	55 N-m
M2040B	BRG SLEEVE SET SCREW	50 FT-LB	70 N-m
XM2782R	FILL & DRAIN PLUGS	35 FT-LB	50 N-m
M2051FT	LUBE OIL PIPE PLUG	SEE NOTE 6B	
M1732Q	THRUST BEARING SLEEVE	10 FT-LB	14 N-m
MA1084F	ROPE GUARD SCREWS	7 FT-LB	9 N-m
M2042BE	MECHANICAL SEAL COLLAR	10 FT-LB	14 N-m
1007280 1007438	RUBBER-BOOT CLAMPS	40 IN-LB	4520 N-mm

5) RECOMMENDED LUBRICATING OIL:
SAE30W/SAE40W
API SERVICE CATEGORY CF OR HIGHER, CERTIFIED BY VENDOR TO PASS CATERPILLAR TEST TO-4.
SAE80W/SAE90W
HYPOID EP TYPE, API GL GRADE 5.

FILL DRIVE UNTIL EXTERNAL RESERVOIR IS ONE THIRD FULL. APPROXIMATE CAPACITY 75-95 LITERS (20-25 GALLONS).

LOCTITE INSTRUCTIONS (SEE SHEET 1 FOR LOCATIONS):
(USE ALL APPLICABLE SOLVENTS, PRIMERS, AND ACTIVATORS)

6) COAT THE * MARKED THREADS WITH LOCTITE THREAD LOCKING COMPOUND NO. 242 (BLUE SEMI-PERMANENT).

6A) COAT THE * * MARKED THREADS WITH LOCTITE THREAD LOCKING COMPOUND NO. 270 (RED, PERMANENT).

6B) COAT PIPE THREADS WITH LOCTITE NO. 545 (PURPLE SEMI-PERMANENT). ASSEMBLE PIPE PLUGS FINGER TIGHT, THEN WRENCH-TIGHTEN 1 1/2 TO 2 TURNS.

7) PACKING INSTALLATION

7A) WEAR SLEEVE

a) PLACE FORWARD RETAINER (1009384) INTO SOCKET HOUSING. ENSURE THE RETAINER IS SEATED FIRMLY AGAINST THE SHOULDER IN THE SOCKET.

b) THIS PROCEDURE IS TO SHIM THE WEAR SLEEVE (1007073) TO THE THRUST BALL (1009389). PLACE THE THRUST BALL INTO THE FORWARD RETAINER. INSTALL ENOUGH SHIMS (OVER SHIM THE AFT RETAINER) AS TO CREATE A GAP BETWEEN THE AFT RETAINER AND THE SOCKET HOUSING.

c) THE WEIGHT OF THE AFT RETAINER WILL CAUSE THE WEAR RING TO SEAT AS A LINE FIT TO THE BALL. BECAUSE THE AFT RETAINER WAS OVER SHIMMED, A GAP WILL EXIST BETWEEN THE RETAINER AND THE SOCKET HOUSING. MEASURE THIS GAP. TAKE SEVERAL READINGS AROUND THE UNIT AND AVERAGE THE VALUES.

d) REMOVE THE AMOUNT OF SHIMS EQUIVALENT TO OR THE NEXT SIZE LARGER THAN THE GAP MEASURED. FOR EXAMPLE, IF THE GAP MEASURED IS .115 INCHES, REMOVE .120 INCHES. THIS WILL CREATE A LINE FIT TO SLIGHTLY LOOSE BETWEEN THE WEAR SLEEVE AND THE BALL. THE WEAR SLEEVE HAS NOW BEEN SHIMMED PROPERLY TO THE BALL.

7B) SEAL AND PACKING

THRUST BALL PACKING, QTY 2, 54.75 LENGTH EACH, IS REQUIRED.

a) REMOVE THE THRUST BALL FROM THE SOCKET. INSTALL THE PACKING, O-RING AND THEN PACKING OVER THE FORWARD RETAINER. NEXT, SHIMS ARE REQUIRED BETWEEN THE WEAR SLEEVE AND PACKING. THE GOAL IS TO OBTAIN THE PROPER SQUEEZE ON THE O-RING. THE PACKING IS NOT A RESILIENT MATERIAL, THEREFORE, ONCE COMPRESSED WILL MAINTAIN ITS SHAPE. PROPER SQUEEZE ON THE O-RING IS 10-15% OF THE CROSS SECTION WHICH IS .04 TO .06 INCHES.

b) INITIALLY OVER-SHIM THE PACKING MATERIAL BY INSERTING .150 INCHES OF SHIMS. INSTALL THE WEAR SLEEVE , AFT RETAINER AND BOLTS. TORQUE EVENLY TO 25 FT-LB. BECAUSE THE PACKING WAS OVER-SHIMMED, A GAP WILL EXIST BETWEEN THE RETAINER AND THE SOCKET HOUSING. MEASURE THIS GAP. TAKE SEVERAL READINGS AROUND THE UNIT AND AVERAGE THE VALUES.

c) LOOSEN THE BOLTS ON THE AFT RETAINER TO ALLOW THE O-RING TO RELAX AGAIN, MEASURE THIS GAP. TAKE SEVERAL READINGS AROUND THE UNIT AND AVERAGE THE VALUES. THE DIFFERENCE BETWEEN THESE TWO READINGS IS THE SQUEEZE ON THE O-RING.

7C) EXAMPLE

a) .150 SHIMS ON THE PACKING, RETAINER BOLTS TORQUED TO 25 FT-LBS.— GAP=.030 AVG.
b) LOOSEN RETAINER BOLTS. — GAP=.110 AVG.
c) SQUEEZE ON O-RING. — SQUEEZE=.080

THE O-RING SQUEEZE SHOULD BE BETWEEN .040-.060. IN THIS EXAMPLE, 0.030 OF SHIM MATERIAL SHOULD BE REMOVED.

8) BEARING AND SLEEVE INSTALLATION
BEARING RACES AND SEAL SLEEVES MUST BE SHRUNK ONTO SHAFTS. HEAT TO ABOUT 120° C (250° F)

AT ASSEMBLY, COAT PROPELLER AND INPUT SHAFTS AND THE BEARINGS AND SLEEVE I.D. WHERE THEY ARE IN CONTACT. COAT WITH AN ANTI-SEIZE PRODUCT THAT DOES NOT CONTAIN GRAPHITE OR MILYBDENUM DISULPHIDE. TWIN DISC RECOMMENDS "LOCTITE WHITE HI-TEMP ANTI-SEIZE" NO. 34517 OR 34518 OR EQUAL PRODUCT.

APPLY A THIN EVEN COATING OF PASTE ONTO COMPONENT SURFACES. RUB THOROUGHLY INTO SURFACES WITH A CLEAN LINT FREE CLOTH. LEAVING A COATING DEPTH OF ABOUT .0001 IN (.003 mm).

EXCESSIVE COATING DEPTH WILL RESULT IN SLEEVE AND BEARING DISTORTION AND MAY PREVENT BEARING ASSEMBLY AND REDUCE BEARING LIFE.

AFTER INSTALLING PROPELLER BEARING RACE AND PRIOR TO INSTALLING MECHANICAL SEAL, CLEAN EXCESS ANTI-SEIZE (F) PASTE FROM PROPELLER SHAFT.

9) APPLY MARINE GRADE SILICONE (NON-HARDENING) TO THE FIN PAD SURFACE PRIOR TO INSTALLING FIN.

10) TORQUE JAM NUT TO 700-800 FT.-LB. (1000-1150 N-m). APPROACH LOWER VALUE. IF SLOT DOES NOT ALIGN WITH HOLE IN SHAFT, INCREASE TORQUE UNTIL THE HOLE ALIGNS. DO NOT EXCEED MAXIMUM TORQUE.

11) PROPELLER NUT TORQUE REQUIRES PERIODIC CHECK; SEE TWIN DISC SERVICE MANUAL FOR PROPELLER NUT TORQUE SCHEDULE.

12) SEE TWIN DISC SERVICE MANUAL FOR AFT SEAL REPLACEMENT PROCEDURE.

13) SEE TWIN DISC SERVICE MANUAL FOR ALL OTHER PROCEDURES AND SPECIFICATIONS.

14) P/N (QTY) NAME

SUPPORTING DOCUMENTATION:

BILL OF MATERIAL (BOM)--------SEE CHART
INSTALLATION DRAWING -------- 1011039
SERVICE MANUAL ---------- 1020915
MASS ELASTIC SYSTEM DWG. ---- B3504AJ
OWNER'S MANUAL ---------- 1021487

UNLESS OTHERWISE SPECIFIED MACHINED DIMENSIONS X.X ±0.030 X.XX ±0.010 X.XXX ±0.005 ALL ANGULAR TOLERANCES ±1° GEOMETRIC TOLERANCING PER ASME Y14.5M 1994	WEIGHT 596 kg 1312 LBS.	WRP LBS/IN²	FIRST USE ASSY. ASD16M1 MODEL	INCH THIRD ANGLE PROJECTION	MATERIAL / HEAT TREAT
	NOTICE: THIS PRINT CONTAINS PROPIETARY INFORMATION AND IS NOT TO BE USED IN ANY MANNER DETRIMENTAL TO THE INTEREST OF TWIN DISC, INCORPORATE. THIS NOTICE IS NOT INTENDED TO NULLIFY OR LIMIT RIGHTS GRANTED TO THE U.S. GOVERNMENT OR OTHERS BY CONTRACT.			SIMILAR TO 1020764	NAME DRIVE ASSEMBLY

SHEET 1
PARTS DRAWING
SHEET 2
ASSEMBLY NOTES

DATE 06-25-2009	TWIN DISC INCORPORATED RACINE, WI 53403 - USA	
SCALE 1:4		
DRN. D. Meyers	1021361_SERIES	
CHK F.Nystrom		
APPD. F.Nystrom	DWG SIZE D	SHT. 2 OF 2 REV J

VIEW A-A
1006719

PERFORMANCE TEST REQUIREMENTS

REFER TO FOLLOWING PERFORMANCE & FUNCTION CHECKS AND SUMMERIZE IN A REPORT FORM FOR EACH CYLINDER. THE PERFORMANCE TEST SHOULD BE DONE IN THE FOLLOWING LISTED ORDER.

A) CYCLE TEST
   CYCLE CYLINDER WITH A 1000 PSI INTERNAL HYDRAULIC LOAD FOR 250 CYCLES.
B) BREAKING FORCE
   RECORD BREAKING FORCE TO INITATE CYLINDER TRANSLATION WITH NO EXTERNAL SIDE LOAD. RECORD THIS FORCE AT THE FULLY RETRACTED & MID STROKE POSITIONS.
C) LEAK TEST
   1.) STATIC SEALS (VISUAL)
      NO LEAKS ALLOWED FOR ALL STATIC O'RING SEALS AT 2500 PSI OPERATING PRESSURE.
   2.) DYNAMIC SEALS
      -RECORD LEAKAGE PAST THE PISTON SEALS PER TIME PERIOD.
      -NO LEAKAGE ALLOWED PAST ROD GUIDE SEAL AT 2500 PSI OPERATING PRESSURE.
D) DIMENSIONAL CHECK
   RECORD EXTENDED & RETRACTED CYLINDER LENGTHS.

CYLINDER SPECIFICATIONS

MODEL NO. D-11778
MOUNTING STYLE H-61-S
BORE 5 1/2
STROKE 5.77

ROD DIA. 3"
CUSHIONS NONE
OPER. MEDIA STD. HYD. OIL
OPER. PRESS. 1600 P.S.I. OPERATING
2000 P.S.I. SYSTEM RELIEF VALVE

NOTE:
1) MILWAUKEE CYLINDER STD. TOLERANCES APPLY TO ALL DIMENSIONS.
2) ETCH TWIN DISC PART NO. 1006581, MILWAUKEE CYLINDER SERIAL NO. AND MODEL NO. D-11778 TO ROD END CAP
3) XYAN COATING APPLIED TO BARREL AND END CAP TO PREVENT GALLING (B) (A)
4) ROD END PIN TO HAVE MBL 1811 COATING .010 THICK
5) USE LOCTITE #242 WHEN INSTALLING ITEMS 23 & 26.

PLATE ANGLE ITEM "8"	TRIM CYLINDER	CYLINDER GROUP
60°	1006581	1006720
40°	1006581A	1006720A
50°	1006581B	1006720B

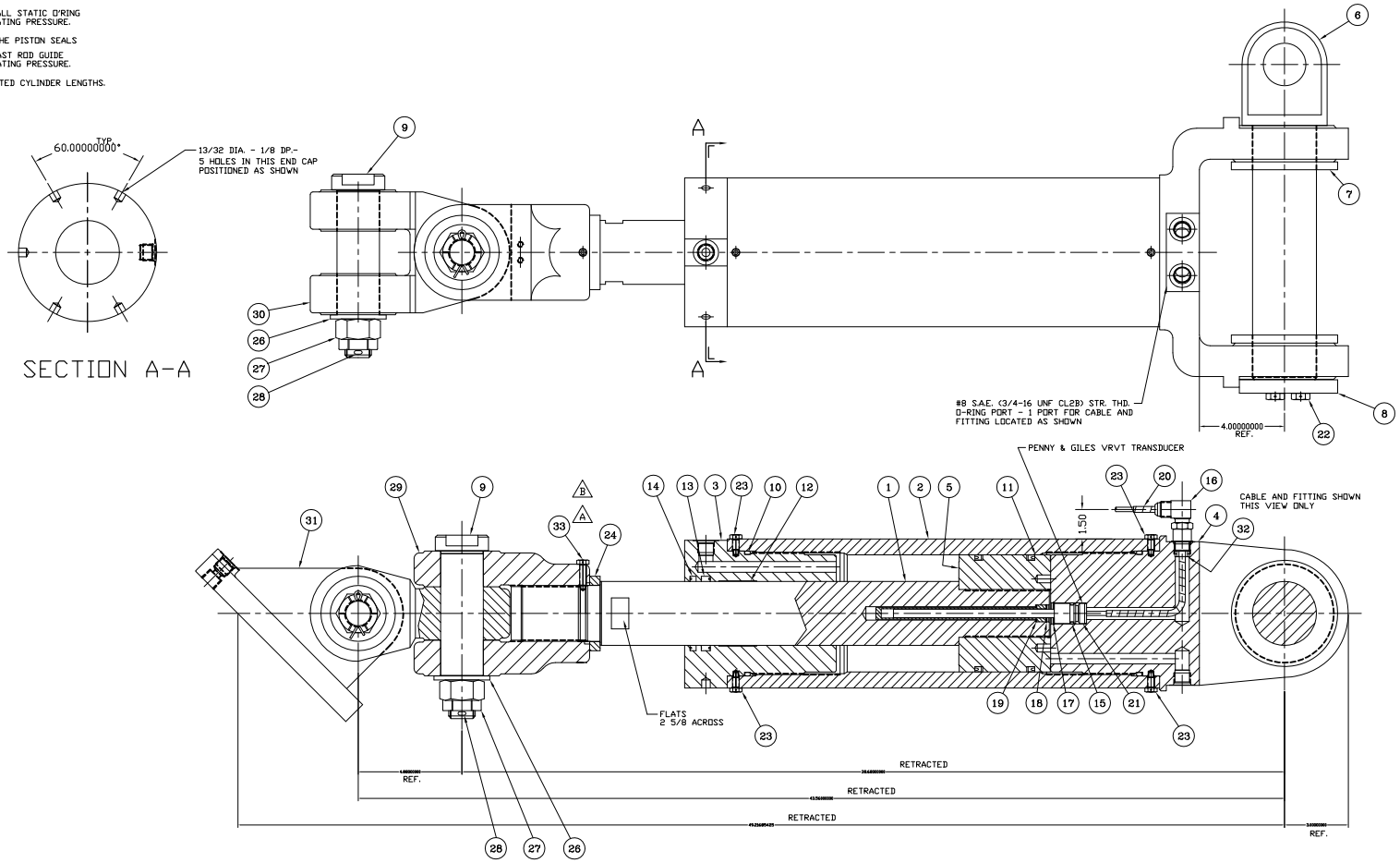

VENDOR: MILWAUKEE CYLINDER
CUDAHY, WI
REF. D-11788

ELECTRONIC MODULE SPECIFACTIONS

SUPPLIER: PENNY & GILES CONTROLS
163 PLEASANT STREET
ATTLEBORO, MA

TRANSDUCER: -MODEL VRVT100/I/S/150/EM-1B W/15 FT. OF POTTED CABLE

INPUT: SUPPLY VOLTAGE (+Vs) 22Vdc to 26Vdc

OUTPUT: OUTPUT VOLTAGE (Vo) ±5Vdc

POLARITY: ZERO ADJUST 100%

TEMPERTURE RANGE: -30°C TO 80°C

MODULE HOUSING: -CAST ALUMINUM ALLOY
-ELASTOMER ISOLATORS FOR VIBRATION CONTROL.

THIRD ANGLE PROJECTION

SIMILAR TO

REV	SHEET	ZONE	CHANGE NO.	DATE
D			ECNWF-21288	XX-XX-XX
C		A6	ECN10842	5-21-02
B		B3 C8	26399	8-28-95
A		D3	25450	8-1-94

MATERIAL
HEAT TREAT
SURFACE TREATMENT

WEIGHT 450 LBS.
WR² LBS. IN²
FIRST USE
ASSY.
MODEL ADS-16
NAME TRIM CYL. ASS'Y

UNLESS OTHERWISE SPECIFIED
MACHINED DIMENSIONS
X.X ±0.030
X.XX ±0.010
X.XXX ±0.005
ALL ANGULAR TOLERANCES ±1°
GEOMETRIC TOLERANCING PER ANSI Y14.5M 1982

DATE 2-24-93
SCALE NONE
DRN. J.KJAER
CHK. G.MATRANGA
APP'D. G.MATRANGA

TWIN DISC INCORPORATED
RACINE, WI 53403 - USA

1006581 SERIES

SHEET 1 OF 1 REV D

INSTALLATION NOTES:

1) APPLY LUBRICANT TO THREADED ROD 1007425, PIN 1005976, AND PIN 1009433. USE A MARINE GRADE LITHIUM GREASE, FORMULATED FOR USE IN SALT WATER. (TWIN DISC RECOMMENDS "RED LITHIUM GREASE" AVAILABLE FROM ZEP MANUFACTURING CO., ATLANTA, GEORGIA, USA. OR AN EQUIVALENT PRODUCT.)

2) APPLY A LIBERAL COATING OF LUBRICANT TO BOTH THRUST TUBE BORES. PLACE PINS 1005976 AND 1009433 INTO THRUST TUBES. WHEN INSTALLING 1009433, ALIGN PLATE 1009583 AND DOWEL PINS 1009584 WITH THE MATING HOLES IN THE STARBOARD THRUST TUBE. SECURE BOTH PINS WITH WASHERS, NUTS, AND COTTER PINS AS SHOWN.

   IMPORTANT: WHEN PROPERLY INSTALLED, PIN 1009433 (STARBOARD) SHOULD BE SECURED FROM ROTATION - PIN 1005976 SHOULD ROTATE FREELY WITHIN THE PORT THRUST TUBE BUSHING.

3) ATTACH A CLEVIS TO EACH PIN 1006000, WITH BORES AND PIN BODY LIBERALLY LUBRICATED (DO NOT LUBRICATE CLEVIS PIN THREADS). SECURE CLEVIS PINS WITH WASHERS, NUTS, AND COTTER PINS.

4) THREAD BOTH NUTS 1006013 INTO THE MIDDLE OF ROD 1007425. PLACE A WASHER 1007418 ON EITHER SIDE OF NUTS, AND PLACE ONE DOWEL PIN 1007969 (LUBRICATED) INTO EACH TIE BAR TUBE. ALIGN THE APPROXIMATE CENTER OF THE SLOT WITH THE SET SCREW HOLE IN THE LONGER TUBE ASSEMBLY, AND LOOSELY INSTALL SET SCREW 1006351. TIGHTEN NUT 1006013 TO ABOUT 50 FT-LBS (65 N-M).

5) INSTALL THE SHORT (PORT) TUBE ASSEMBLY WITH DOWEL PIN 1007969, AND ADJUST THE TUBE SUB-ASSEMBLY TO THE DESIRED LENGTH. DO NOT TIGHTEN SET SCREWS AT THIS TIME. THE THREADED ROD SHOULD BE SOMEWHAT CENTERED BETWEEN THE TUBES. VERIFY THAT THE ROD EXTENDS BEYOND THE Ø1/4 WITNESS HOLES IN EACH TUBE.

6) ASSEMBLE THE TIE BAR CENTER SECTION TO THE CLEVISES WITH THE REMAINING TWO CLEVIS PINS 1006000, LUBRICATED AS BEFORE. CHECK AND RE-ADJUST THE LENGTH TO ACHIEVE THE DESIRED SPAN BETWEEN PROPELLER SHAFT CENTERS. APPLY LOCTITE TO THE SET SCREWS 1006351 AND TORQUE ALL FASTENERS TO THE REQUIRED VALUES. INSTALL FOUR COTTER PINS 1007534.

Ⓑ Ⓔ

TIE BAR ASS'Y	STBD TUBE ASS'Y	DRIVE CTR. DIST. (INCHES)	WEIGHT (LBS.)	REF. BOM	REVISION	WORKFLOW
1020009	1020010	57.5–61	185.5	1020008	E	ECN13057
1021831	1021452	64.5–67.5	191.5	1021450	E	ECN13057
1023760	1023761	69.5–72.5	193.5	1023759	E	ECN13057
1024668	1024671	72.5–75.5	194.5	1024682	E	ECN13057
1023817	1023818	78.5–81.5	196.0	1023816	E	ECN13057
1019112	1019111	82–85	206.5	1019117	E	ECN13057
1007424	1007421	86–89	210.0	1007424	E	ECN13057
1019113	1007422	94–97	219.5	1019118	E	ECN13057
1019114	1007423	115.6–118.6	235.0	1019119	E	ECN13057
1025324	1025326	97–100	236.5	1025324	–	DIAWF-00244

Ⓒ

TORQUE VALUES		
COMPONENT	IMPERIAL VALUES	METRIC VALUES
1018533 NUT	300 FT-LBS	405 N-M
1005975 NUT	500-900 FT-LBS	675-1225 N-M
1006013 NUT	500 FT-LBS	675 N-M
1006351 SCREW	25 FT-LBS	33 N-M

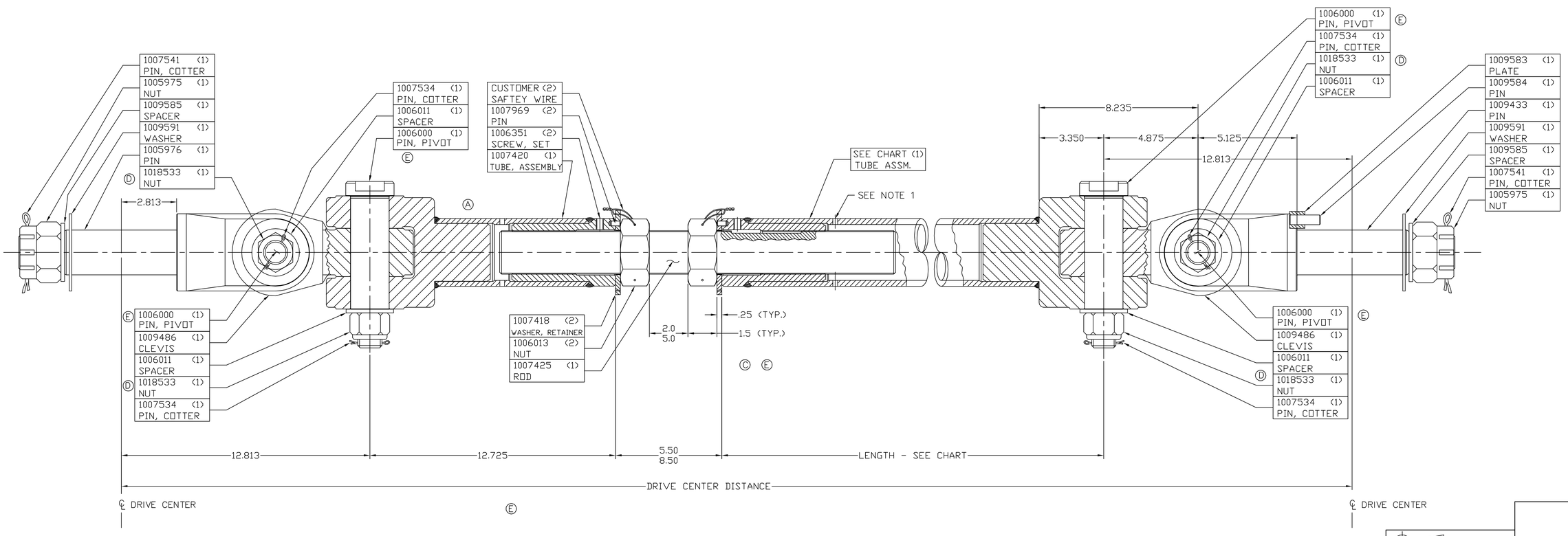

THIRD ANGLE PROJECTION

SIMILAR TO

REV	SHEET	ZONE	CH. NO.	DATE
G			ECNWF-21054	7-24-09

REV	SHEET	ZONE	CH. NO.	DATE
F			DIAWF-00244	5-21-09
E			ECN13057	3-4-05
D			ECN10613	1-18-02
C		D3	30335	9-21-00
B		D6	29498	8-10-99
A		E4	27695	4-1-97

MATERIAL

HEAT TREAT

SURFACE TREATMENT

WEIGHT: SEE CHART LBS.

WR²: N/A

FIRST USE: ASSY. ASD 16

MODEL

NAME: TIE BAR ASS'Y

UNLESS OTHERWISE SPECIFIED
MACHINED DIMENSIONS
X.X ±0.030
X.XX ±0.010
X.XXX ±0.005
ALL ANGULAR TOLERANCES ±1°
GEOMETRIC TOLERANCING PER ANSI Y14.5M 1982

DATE: 8/2/95

SCALE: 3 = 8

DRN. J. KJAER

CHK. G.Matranga

APPD. G.Matranga

TWIN DISC INCORPORATED
RACINE, WI 53403 - USA

1007424_SERIES

SHEET 1 OF 1 REV G

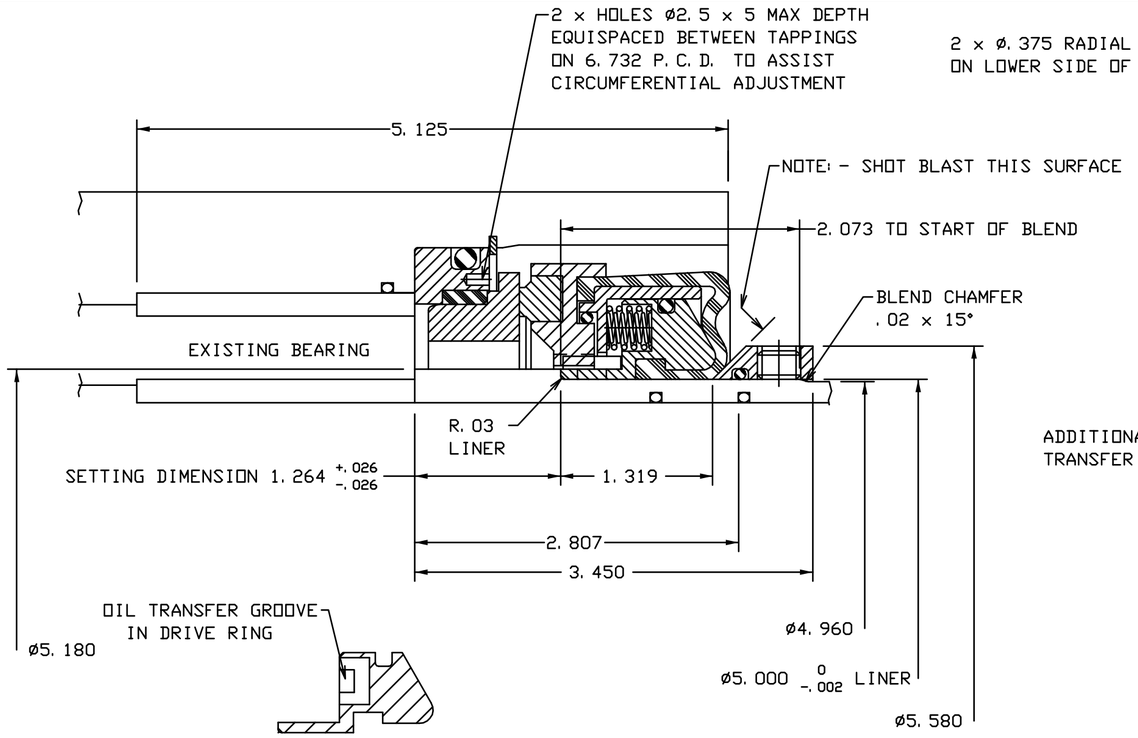

VIEW SHOWING
OIL TRANSFER GROOVES

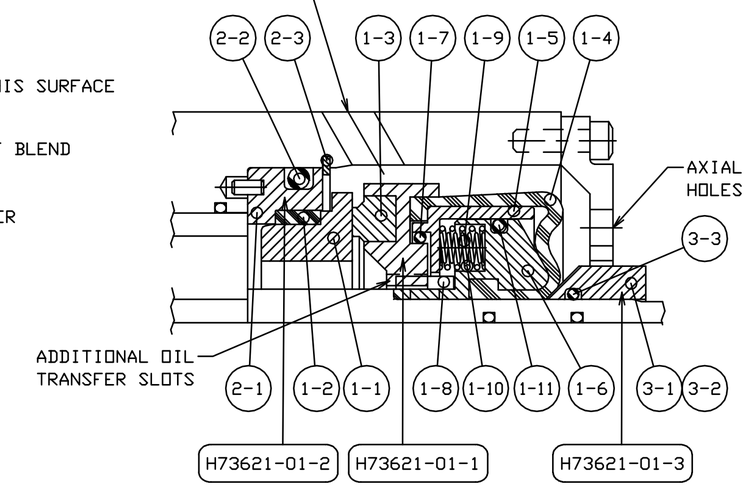

VIEW SHOWING COOLING HOLES

DRG POSN	DESCRIPTION	MATERIAL	QTY
H73621-01-1	SEAL ASSY		1
-1-1	SEAT (NON-SPLIT)	SILICON CARBIDE	1
-1-2	SEALING RING	NITRILE	1
-1-3	FACE (NON-SPLIT)	SILICON CARBIDE	1
-1-4	BELLOWS	NITRILE	1
-1-5	SLEEVE	STAINLESS STEEL	1
-1-6	DRIVE RING	STAINLESS STEEL	1
-1-7	O CORD	NITRILE	1
-1-8	KEY	STELLITE	4
-1-9	SPRING (INNER)	STAINLESS STEEL	12
-1-10	SPRING	STAINLESS STEEL	12
-1-11	O CORD	NITRILE	1
H73621-01-2	SEAT HOUSING ASSY		1
-2-1	SEAT HOUSING	STAINLESS STEEL	1
-2-2	O CORD	NITRILE	1
-2-3	CIRCLIP	SPRING STEEL	1
H73621-01-3	ADAPTOR RING ASSY		1
-3-1	ADAPTOR RING	STAINLESS STEEL	1
-3-2	SCREW	STAINLESS STEEL	8
-3-3	O RING	VITON	1

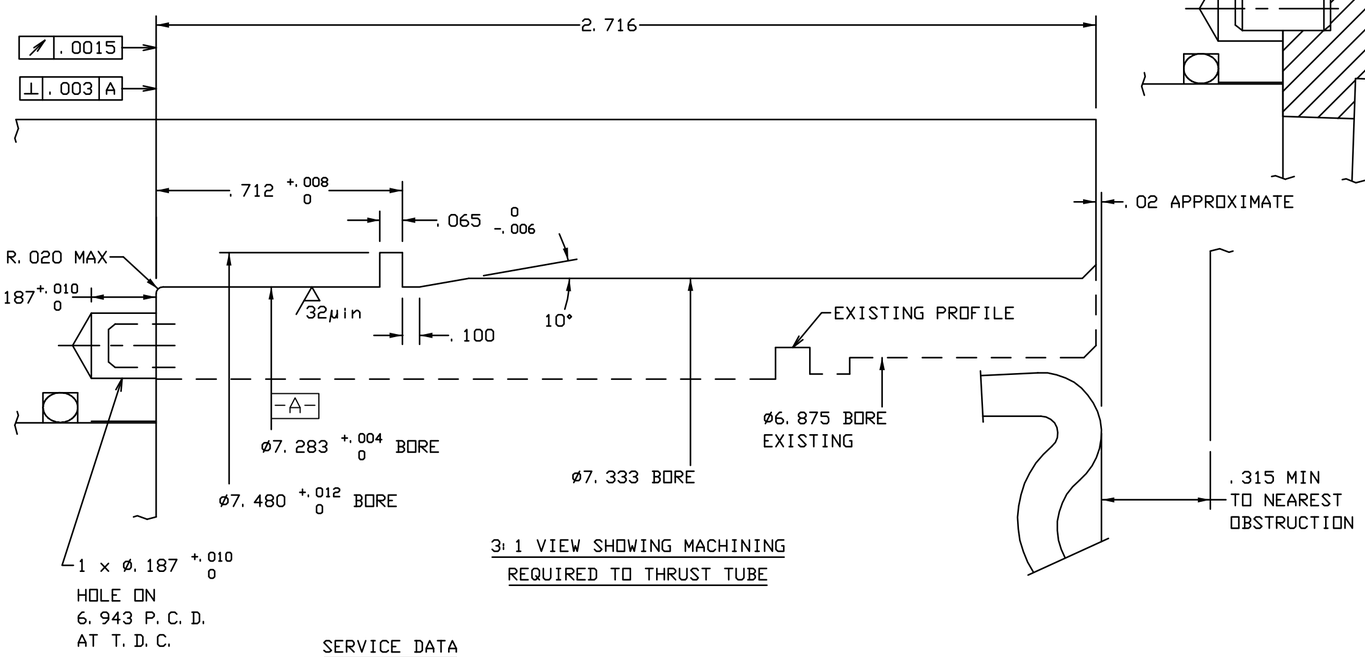

3:1 VIEW SHOWING MACHINING
REQUIRED TO THRUST TUBE

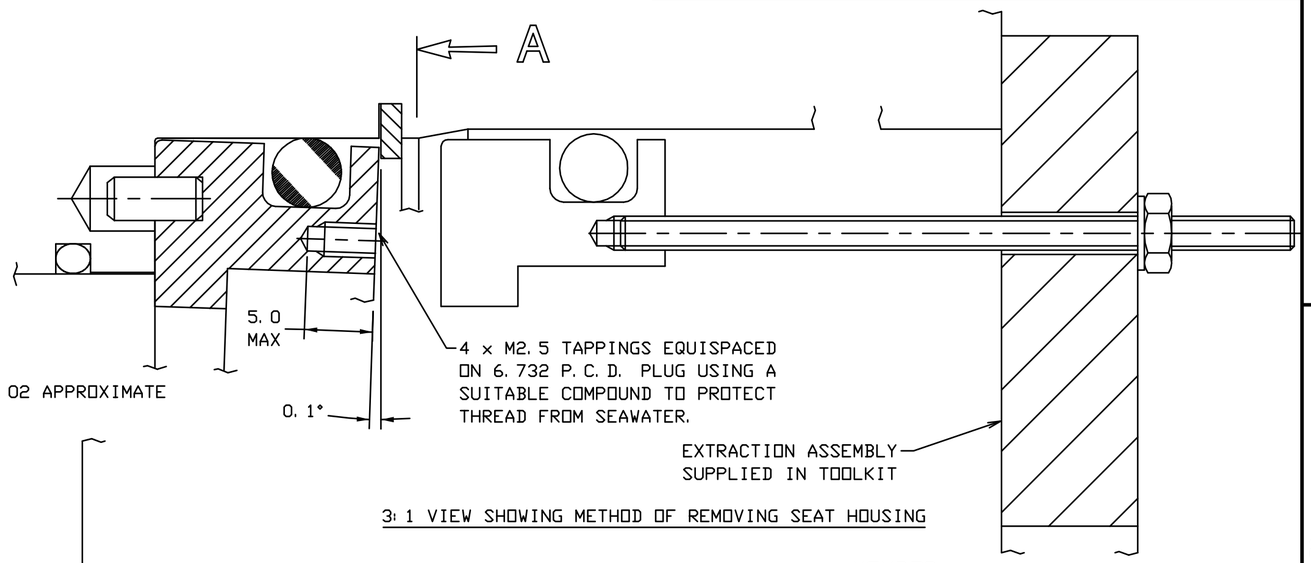

3:1 VIEW SHOWING METHOD OF REMOVING SEAT HOUSING

VENDOR:
JOHN CRANE MARINE, USA
P/N H73621-01

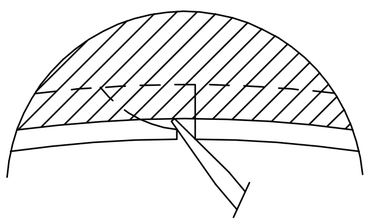

3:1 SECTION ON ARROW 'A' SHOWING
METHOD OF REMOVING CIRCLIP

Ⓑ NOTE:
THE SET SCREWS PACKAGED WITH THIS SEAL ARE ONLY TO BE USED WHEN MOUNTED ON A SHAFT SLEEVE. WHEN MOUNTING DIRECTLY ON THE SHAFT, USE ASSEMBLY 1020800.

SERVICE DATA

SERVICE..... : OIL (SAE 80 OR 90)
TEMPERATURE..... : AMBIENT
REV/MIN..... : 1000 NORMAL
: 2400 MAXIMUM
PRESSURE ID (OIL)..... : 1 BAR RECOMMENDED
: 0.3 BAR MIN (SEE NOTE 2)
PRESSURE OD (WATER)..... : 0 BAR (FULLY WETTED)

NOTES

1. ALL DIMENSIONS IN INCHES
2. IF WATER INGRESS OCCURS INCREASE OIL PRESSURE ABOVE MINIMUM SPECIFIED
3. ITEM 3-1 TO BE PRESSED FIRMLY AGAINST BACK OF SEAL BELLOWS BEFORE GRUBSCREWS ARE TIGHTENED ON TO LINER RECESS

3-2	3/8"-24	13
DRG POSN	THREAD UNF	TORQUE FT-LBS

THIRD ANGLE PROJECTION
SIMILAR TO

Ⓐ REDRAWN, SUPERSEDES 1005108 DATED 7-15-97.

REV	SHEET	ZONE	CH. NO.	DATE	REV	SHEET	ZONE	CH. NO.	DATE
B	1	A2	ECNWF-20217	11-01-08					
A		D1	———	2-13-02					

MATERIAL
HEAT TREAT
SURFACE TREATMENT
WEIGHT LBS. | WR² LBS. IN²
FIRST USE
ASSY.
MODEL ASD-16
NAME SEAL

UNLESS OTHERWISE SPECIFIED
MACHINED DIMENSIONS
X.X ±0.030
X.XX ±0.010
X.XXX ±0.005
ALL ANGULAR TOLERANCES ±1°
GEOMETRIC TOLERANCING PER ANSI Y14.5M 1982

DATE 2-13-02
SCALE 1=1
DRN. JM
CHK. FN
APPD. FN

TWIN DISC
INCORPORATED
RACINE, WI 53403 - USA

1005108

SHEET 1 OF 1 | REV B

D C B A

	PART NO.	QTY.	DESCRIPTION	MATERIAL
	1005108	1	SEAL ASSY	JCN #H73621-01
Ⓑ	NOTE: SET SCREWS IN 1005108 ARE TO BE REMOVED AND DISCARDED			
Ⓑ	MA1245A	8	SCREW, SET	PLASTIC TIPPED SS
	1021025	AS REQ'D	SHIMS (ASSORTMENT)	PLASTIC OR SS STEEL
Ⓑ	1020800	1	SCHEMATIC	PACKAGE THIS DRAWING WITH EACH SEAL

	ITEM	THREAD U.N.F.	TORQUE FT-LBS
Ⓑ	MA1245A	3/8"-24	13

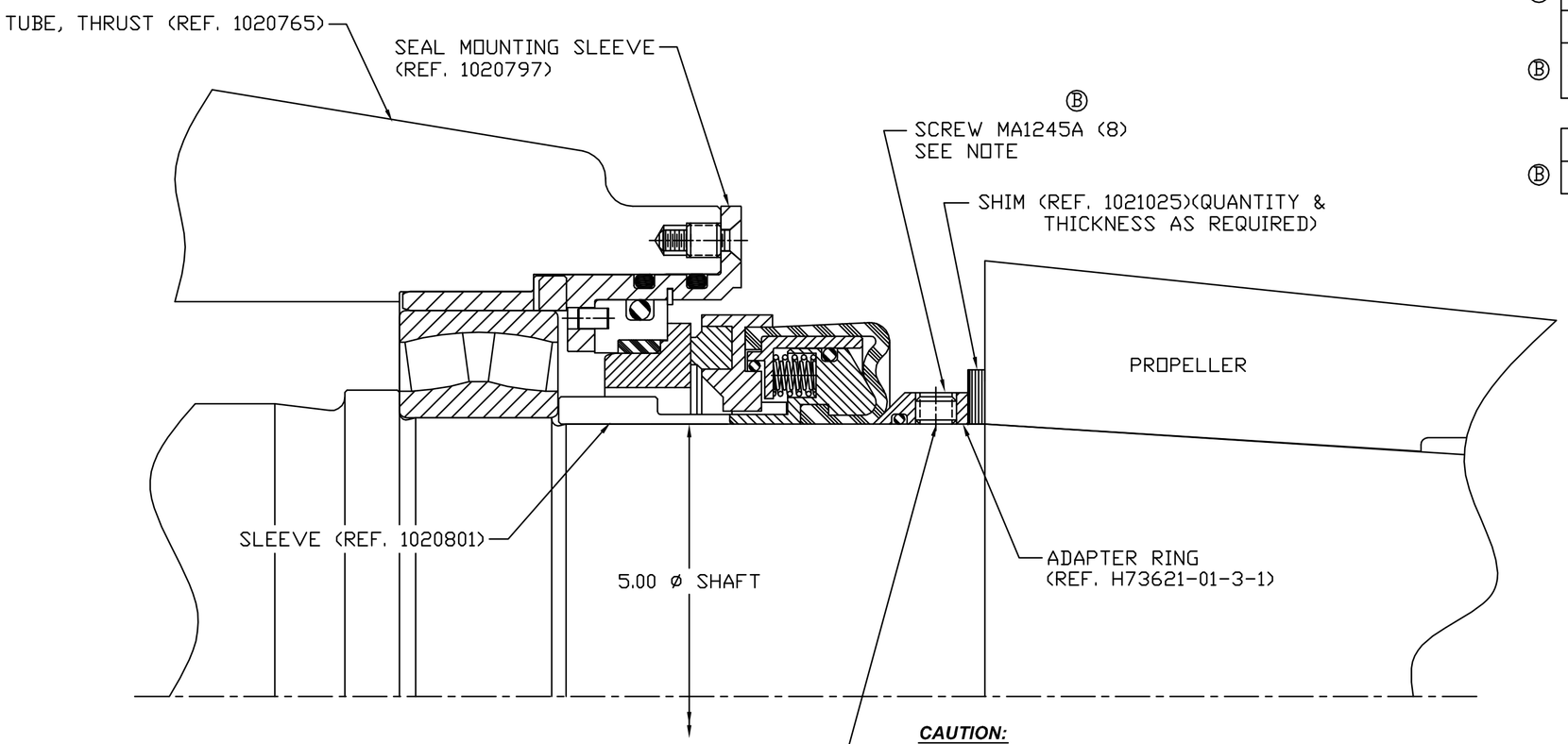

CAUTION:
DO NOT DRILL, DIMPLE, OR OTHERWISE MARK THE PROPELLER SHAFT WHEN INSTALLING SETSCREWS FOR THIS SEAL.

Ⓐ Ⓑ

(NOTE: SETSCREWS HAVE PLASTIC ENDS AND WILL NOT DAMAGE THE SHAFT. THEY ARE DESIGNED TO HOLD THE COLLAR ONLY DURING ASSEMBLY AND MAY BE LEFT IN PLACE THEREAFTER. SEAL PRELOAD IS RETAINED PERMANENTLY BY SHIMS)

SERVICE DATA:

SERVICE	OIL (SAE 30 OR 40)
TEMPERATURE	AMBIENT
REV./MIN.	1000 NORMAL 2400 MAXIMUM
PRESSURE I.D. (OIL)	1 BAR RECOMMENDED 0.3 BAR MIN. (SEE NOTE 2)
PRESSURE O.D. (WATER)	0 BAR (FULLY WETTED)

NOTES:

1. ALL DIMENSIONS IN INCHES
2. IF WATER INGRESS OCCURS INCREASE OIL PRESSURE ABOVE MINIMUM SPECIFIED.
3. REMOVE 8 #H73621-01-3-2 SCREWS FROM ADAPTER RING AND REPLACE WITH MA1245A. (THIS SEAL IS IDENTICAL TO 1005108 EXCEPT 8 SET SCREWS AS-DELIVERED ARE REMOVED AND REPLACED BY MA1245A.) Ⓑ

THIS FACE IS ORIENTED 0.1° FROM VERTICAL AND IS CRITICAL TO THE PROPER FUNCTION OF THE SEAL. THE 0.125" ø RIN MUST BE LOCATED AT TOP CENTER WHEN THE SEAT HOUSING IS INSTALLED IN THE THRUST TUBE.

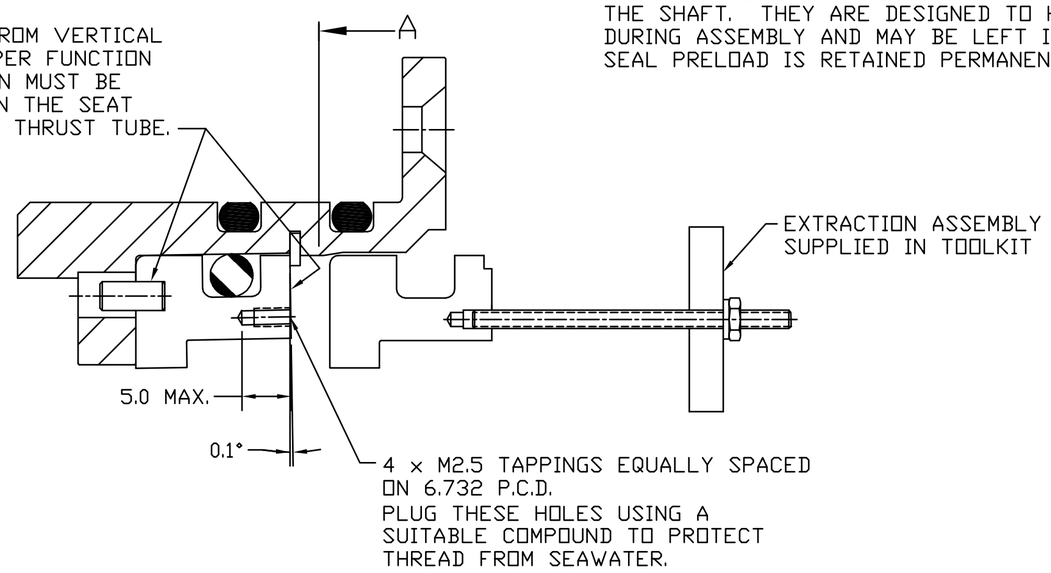

2:1 VIEW SHOWING METHOD OF REMOVING SEAT HOUSING

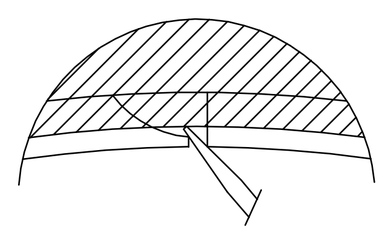

2:1 SECTION ON ARROW "A" SHOWING METHOD OF REMOVING CIRCLIP

REV	SHEET	ZONE	CH. NO.	DATE
B	1		ECNWF-20217	11-01-08
A			ECN11942	2-19-04

UNLESS OTHERWISE SPECIFIED
MACHINED DIMENSIONS
X.X ±0.030
X.XX ±0.010
X.XXX ±0.005
ALL ANGULAR TOLERANCES ±1°
GEOMETRIC TOLERANCING PER ASME Y14.5M 1994

WEIGHT LBS. | WR² LBS./IN² | FIRST USE ASSY. MODEL ASD16

INCH
THIRD ANGLE PROJECTION

MATERIAL —
HEAT TREAT —
SIMILAR TO 1005108
NAME SEAL, MECHANICAL (PROPELLER, SHAFT)

DATE 3-17-03
SCALE NONE
DRN. W.Russell
CHK. FN
APPD. FN

TWIN DISC INCORPORATED
RACINE, WI 53403 - USA

1020800

DWG SIZE C | SHT. 1 OF 1 | REV B

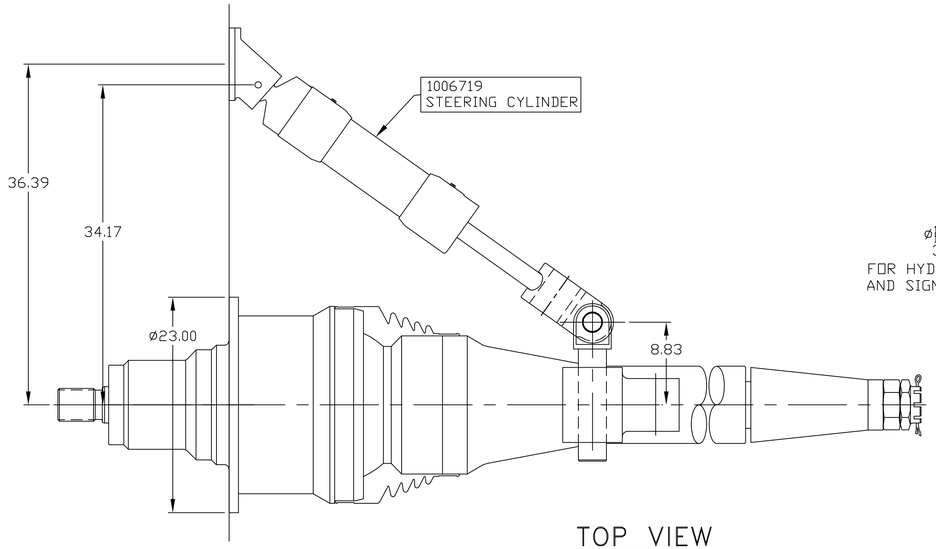

TOP VIEW

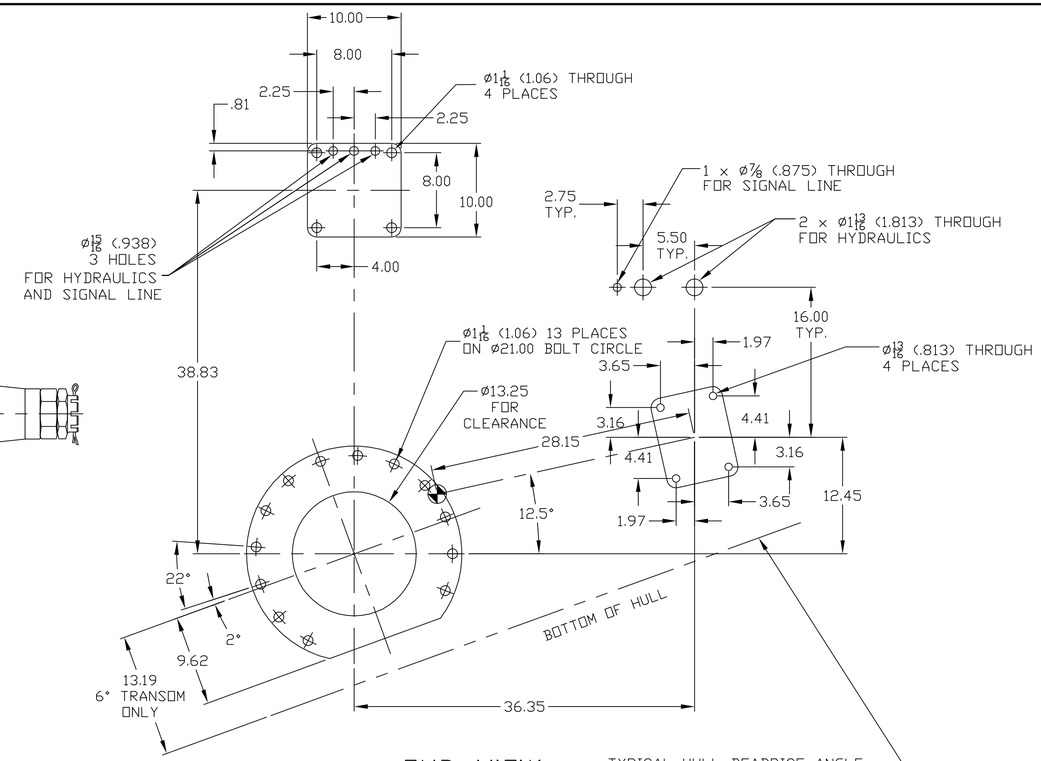

END VIEW

(DIMENSIONS ARE PARALLEL WITH TRANSOM)

NOTES:

1. THIS DRAWING IS TO BE USED AS A GUIDE ONLY. PLEASE REFER TO THE TWIN DISC INSTALLATION MANUAL FOR INSTALLING THE DRIVE AND CYLINDERS.
2. TRANSOM ANGLE FOR ASD UNITS TO BE 6 DEGREES TO VERTICAL, PLUS OR MINUS 1 DEGREE, AS SHOWN IN THE SIDE VIEW. A MOUNTING WEDGE IS REQUIRED FOR TRANSOM ANGLES OTHER THAN 6 DEGREES.
3. BACKING PLATES OF SAME APPROXIMATE DIMENSIONS AS SHOWN FOR EQUIPMENT FOOTPRINT ARE SUPPLIED. ADEQUATE CLEARANCE INSIDE VESSEL TRANSOM SHOULD BE PROVIDED.
4. DRILL ALL HOLES PERPENDICULAR TO TRANSOM.
5. ALL DIMENSIONS ARE IN IMPERIAL (INCH) UNITS.

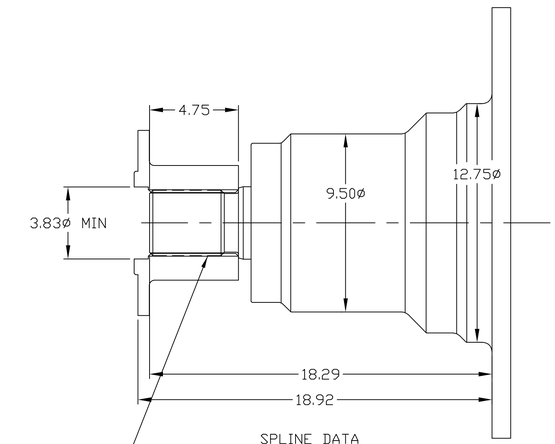

SPLINE DATA
INTERNAL INVOLUTE, FLAT ROOT
SIDE FIT, CLASS 5

NO OF TEETH	27
SPLINE PITCH	8/16
PRESSURE ANGLE	30°
BASE DIA.	2.9228
PITCH DIA.	3.375
MAJOR DIA.	3.548
FORM DIA.	3.507
MINOR DIA.	3.250

CIRCULAR SPACE WIDTH

MAX ACTUAL	.1998
MIN EFFECTIVE	.1963

MEASURED BETWEEN .2160 PINS:

MAX	3.0637
MIN	3.0571

INPUT (COMPANION) FLANGE DETAIL

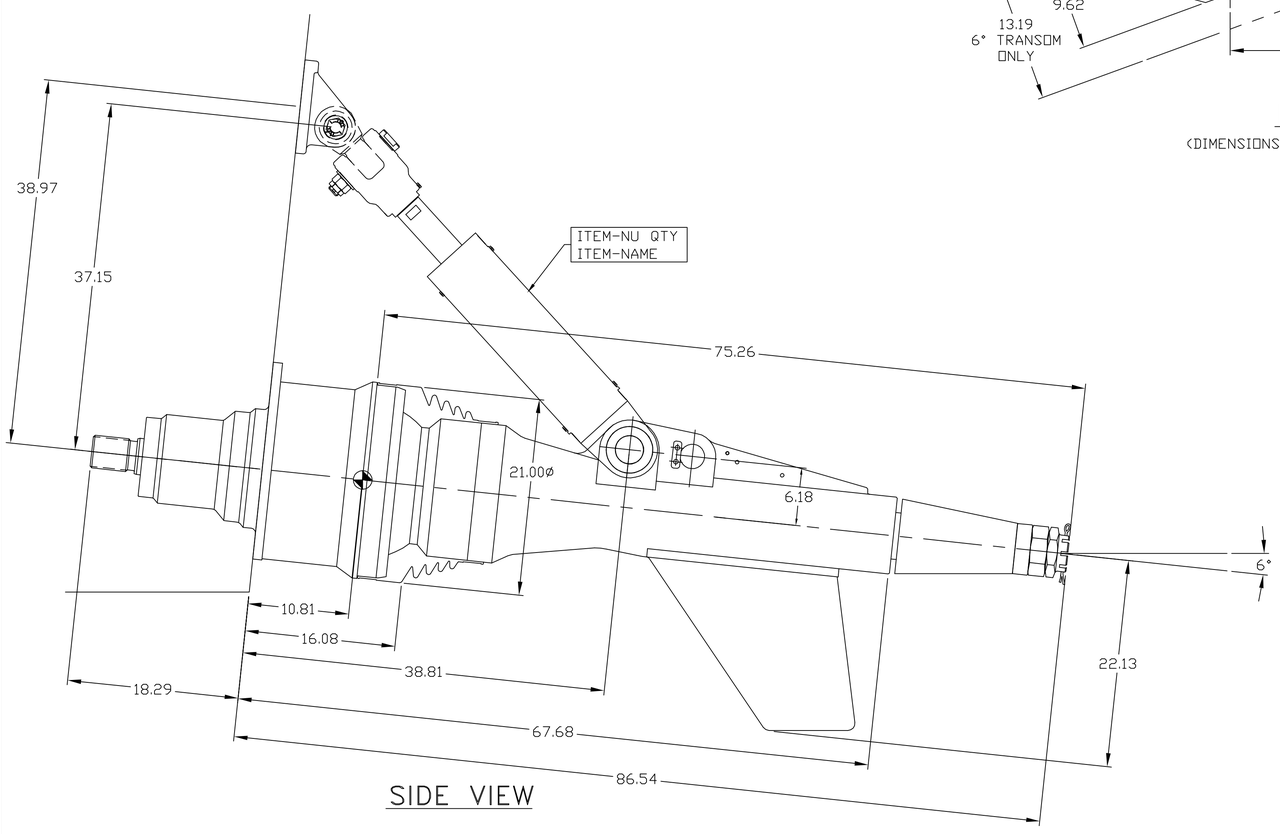

SIDE VIEW

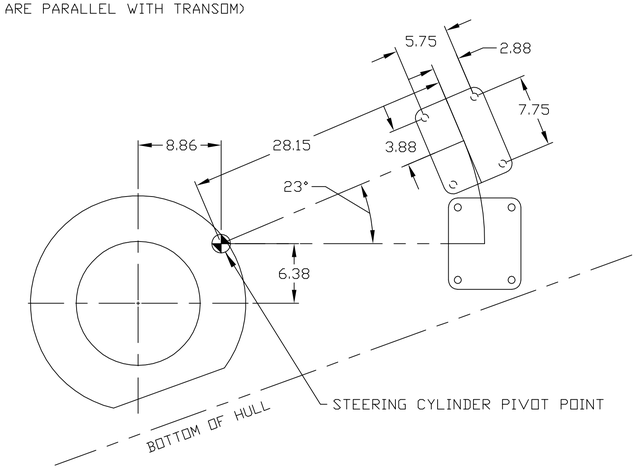

OPTIONAL RANGE
FOR STEERING CYLINDER LOCATION

REV	SHEET	ZONE	CH. NO.	DATE	REV	SHEET	ZONE	CH. NO.	DATE
–			ECNWF-21369	02-03-10					

UNLESS OTHERWISE SPECIFIED
MACHINED DIMENSIONS
X.X ±0.030
X.XX ±0.010
X.XXX ±0.005
ALL ANGULAR TOLERANCES ±1°
GEOMETRIC TOLERANCING
PER ASME Y14.5M 1994

WEIGHT LBS. | WR² LBS./IN² | FIRST USE ASSY. ASD-16 MODEL

INCH
THIRD ANGLE PROJECTION

MATERIAL | HEAT TREAT | SIMILAR TO | NAME

DATE 2-3-10
SCALE .125 : 1
DRN. F.NYSTROM
CHK. J.TURK
APPD. F.NYSTROM

TWIN DISC
INCORPORATED
RACINE, WI 53403 - USA

1025928

DWG SIZE D | SHT. | REV –

#1020915

TWIN DISC, INCORPORATED RACINE, WISCONSIN 53403, U.S.A. 262-638-4000/262-638-4482 (FAX) WWW.TWINDISC.COM